6.17.1. Ball Valves

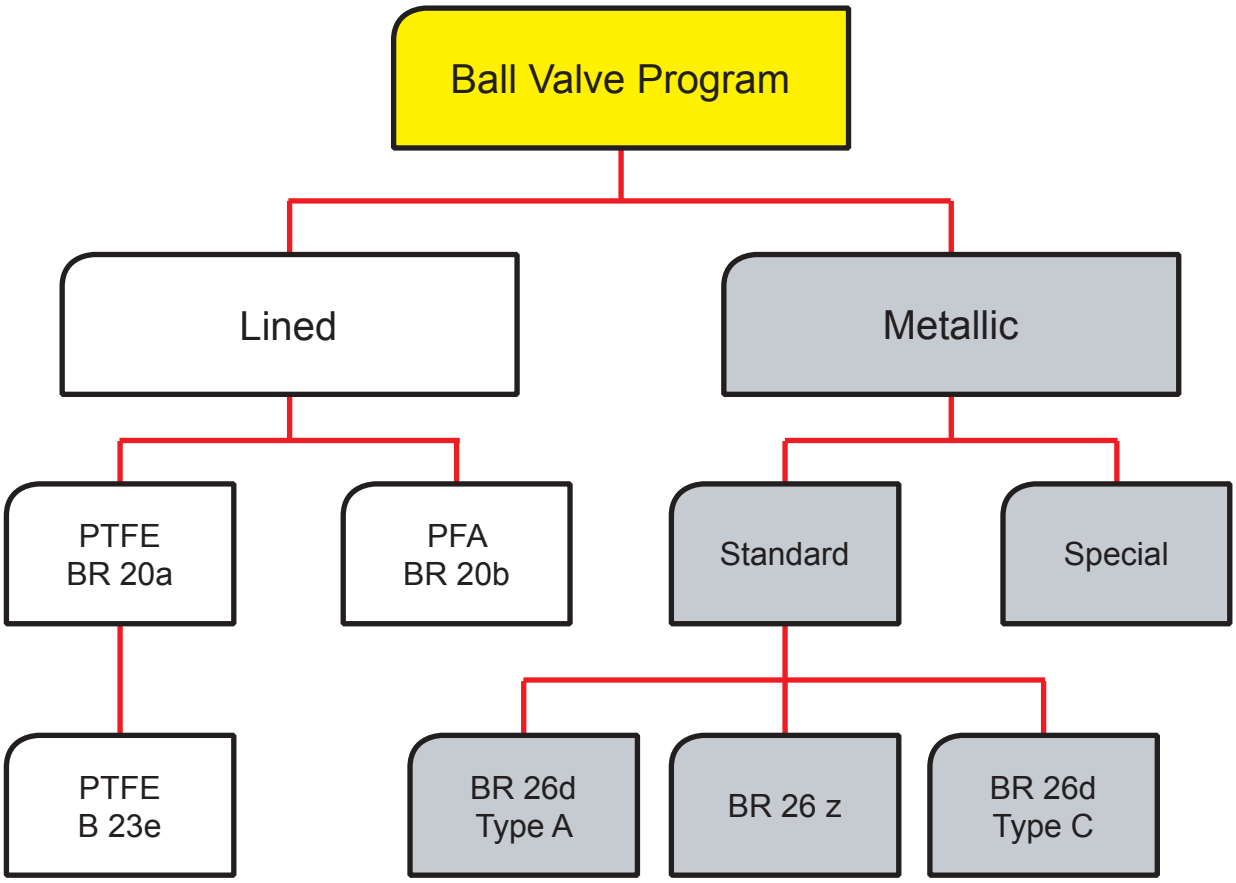

Figure 6.17.1.-1: Ball valve program

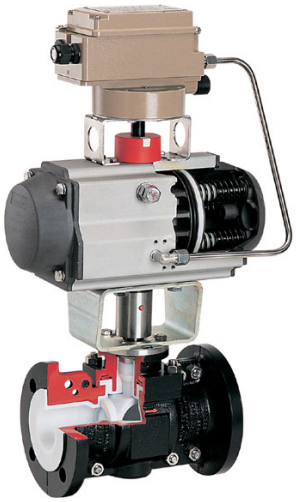

Figure 6.17.1.-2: Ball valve with PTFE lining

Figure 6.17.1.-3: Ball valve with special metal

Ball Valves of metal Series BR 26

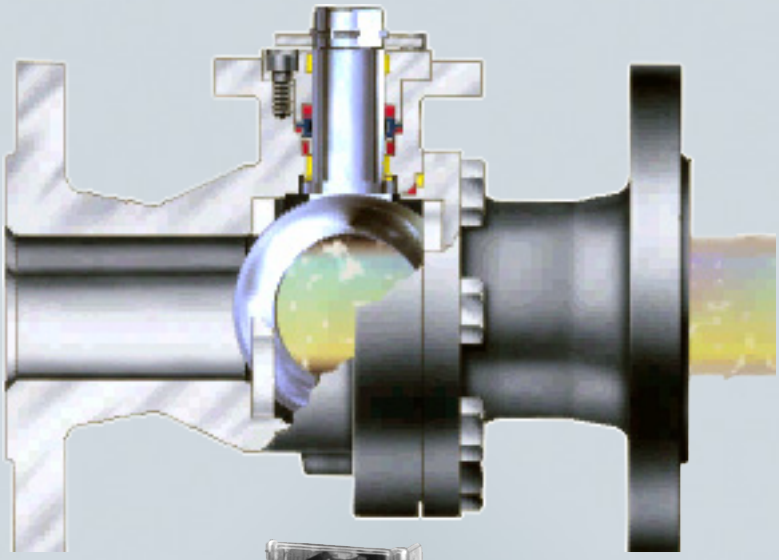

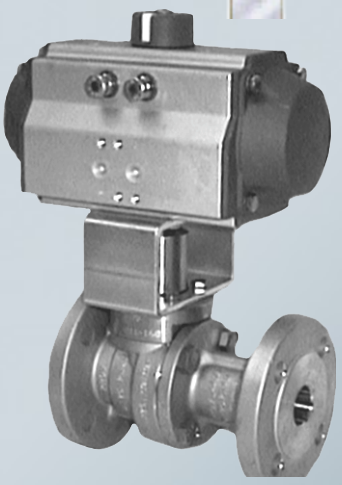

Type BR 26a

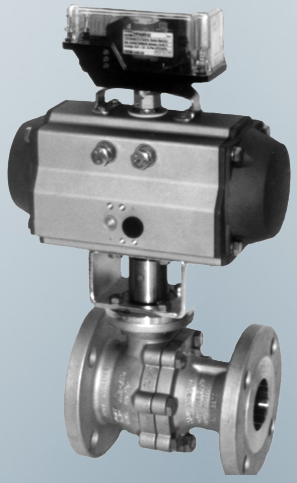

Type BR 26d - Type A

Type BR 26d - Type C

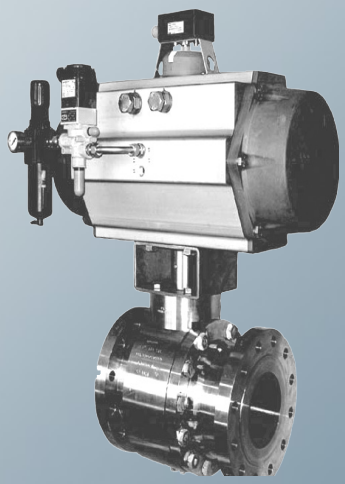

Type BR 26e

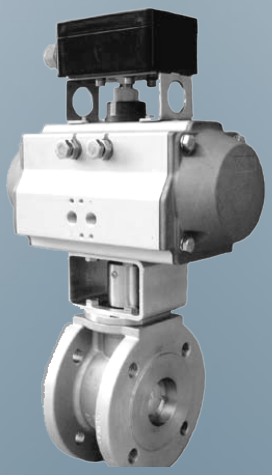

Type BR 26k
Compact version

Type BR 26s

Ball Valve Series BR 26 Ball valves of stainless steel or special material on inquiry.						
Type		BR 26a	BR 26d - Type A	BR 26e	BR 26s	BR 26d - Type C
Standard version	DIN	✓	✓	✓	✓	✓
	ANSI	✓	✓	✓	✓	✓
Temperature		-10 to 200 °C 14 to 392 °F	-10 to 200 °C 14 to 392 °F	-10 to 200 °C 14 to 392 °F	-10 to 200 °C 14 to 392 °F	-10 to 200 °C 14 to 392 °F
Nominal sizes	DN	15 to 200	15 to 150	50 to 200	125 to 500	15 to 200
	NPS	½ to 8	½ to 8	2 to 8	5 to 20	½ to 8
Nominal pressure	PN	16, 25, 40	16 and 40	10 to 160	10 to 40	16 and 40
	Class	150 and 300	150 and 300	150 to 900	150 and 300	150 and 300
Characteristic		On-Off Full bore	On-Off Full bore	On-Off Full bore	On-Off Full bore	On-Off Full bore
Stuffing box packing		Live-loaded PTFE V-ring	Live-loaded PTFE V-ring	Live-loaded PTFE V-ring	Live-loaded PTFE V-ring	Live-loaded PTFE V-ring
Ball sealing		TFM (PTFE)	TFM (PTFE)	TFM (PTFE)	TFM (PTFE)	TFM (PTFE)
Material	Body	A351 CF8M / A182 F316	WN 1.4408	WN 1.4408 / WN 1.4571	WN 1.4408	WN 1.4408
	Ball	WN 1.4408 / 1.4571	WN 1.4408	WN 1.4408 / WN 1.4571	WN 1.4408	WN 1.4408
Leakage rate A acc. to DIN EN 12266-1, P12 (Leakage rate 1 BO acc. to DIN 3230 Part 3)		✓ Bubble-tight version	✓ Tight-closing	✓ Tight-closing	✓ Tight-closing	✓ Bubble-tight version
Hand-lever or Gear-operated actuators		✓	✓	✓	✓	✓
Pneumatic and electric actuators		✓	✓	✓	✓	✓
Ball Valve pictures		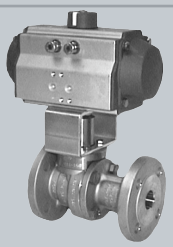		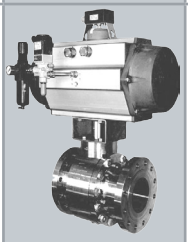		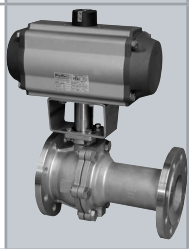
Face to face dimensions: Serie 1 acc. to EN 558-1 (F1 acc. to DIN 3202), Serie 27 acc. to EN 558-1 (F4 / F5 acc. to DIN 3202)		✓	✓	✓ or ASME B 16.10	✓ or ASME B 16.10	✓
Connection - Flanges		According to ASME B16.34 and B16.5 and DIN EN 1092				
Fail-safe position		I-safe position with pneumatic or electric actuators see the associated technical data sheet.				
Accessories		Accessories are available on request for customer specifications.				
Technical data and accessories		For all further data, accessories, and industry codes see the associated technical data sheet.				

*Table 6.17.1.-1: Ball valves **Series BR 26** with stainless steel or special material on inquiry.*