MOUNTING AND OPERATING INSTRUCTIONS

EB 5578-E EN

Translation of original instructions



TROVIS 5578-E Heating and District Heating Controller
With graphics display

Firmware version 3.11.xx

Edition July 2026

Note on these mounting and operating instructions

These mounting and operating instructions (EB) assist you in mounting and operating the device safely. The instructions are binding for handling SAMSON devices. The images shown in this document are for illustration purposes only. The actual product may vary.

⇨ For the safe and proper use of these instructions, read them carefully and keep them for later reference.

⇨ If you have any additional questions not related to the contents of this document, contact SAMSON's After-sales Service (aftersalesservice@samsongroup.com).

Documents relating to the device, such as the mounting and operating instructions, are available on our website:
▶ https://www.samsongroup.com/en/downloads/documentation

Definition of signal words

⚠ DANGER

Hazardous situations which, if not avoided, will result in death or serious injury

⚠ WARNING

Hazardous situations which, if not avoided, could result in death or serious injury

NOTICE

Property damage message or malfunction

Note

Additional information

Tip

Recommended action

Icons and their meaning

Experimental function
New function made available before it becomes a standard function in the controller firmware.

1 Safety instructions and measures ... 6
1.1 Notes on possible severe personal injury ... 7
1.2 Notes on possible property damage ... 7

2 Markings on the device ... 9
2.1 Nameplate ... 9
2.2 Device version ... 9
2.3 Firmware versions ... 10

3 Design and principle of operation ... 13
3.1 Configuration using the TROVIS-VIEW software ... 13
3.2 Connection to SAM DISTRICT ENERGY ... 13
3.3 Technical data ... 14
3.4 Dimensions ... 15
3.5 Values for resistance thermometers ... 16

4 Shipment and on-site transport ... 17
4.1 Accepting the delivered goods ... 17
4.2 Removing the packaging from the heating controller ... 17
4.3 Transporting the heating controller ... 17
4.4 Storing the heating controller ... 17

5 Installation ... 18
5.1 Preparation for installation ... 18
5.2 Mounting the heating controller ... 18
5.3 Electrical connection ... 20

6 Operation ... 27
6.1 Interfaces ... 27
6.1.1 RS-485 interfaces for Modbus-RTU and device bus communication ... 27
6.1.2 Ethernet interface for Modbus-TCP/IP communication ... 27
6.1.3 M-Bus interface ... 27
6.2 Operating controls ... 27
6.3 Operating the heating controller on a smartphone ... 28
6.4 Accessories ... 28

7 Start-up and configuration ... 29
7.1 Changing the display contrast ... 30
7.2 Changing the display language ... 30
7.3 Setting the system code number ... 31
7.4 Activating and deactivating functions ... 31
7.5 Changing parameters ... 33
7.6 Calibrating sensors ... 34
7.6.1 Special values ... 35
7.7 Entering customized key number ... 36

8 Set-up ... 37
8.1 Selecting the operating mode ... 37
8.2 Schedules ... 38
8.2.1 Setting the time and date ... 38
8.2.2 Setting the times-of-use ... 39
8.2.3 Setting the party timer (special time-of-use) ... 41
8.2.4 Programming public holidays (special times-of-use) ... 42
8.2.5 Programming vacation periods (special times-of-use) ... 43
8.3 Entering day and night set points ... 44
8.4 Reset to default settings ... 46
8.5 Information readings ... 47

8.5.1 Adapting the Trend-Viewer....50
8.6 Operating the heating controller in manual mode....52

9 Malfunctions....53
9.1 Error list....54
9.2 Sensor failure....54
9.3 Temperature monitoring....55
9.4 Error status register....55

10 Servicing....57
10.1 Recommended inspection and testing....57
10.2 Firmware update....57
10.2.1 Update over Bluetooth®....57
10.2.2 Update using a computer....58

11 Decommissioning....63

12 Removal....64

13 Repair....65
13.1 Returning devices to SAMSON....65

14 Disposal....66

15 Certificates....67

16 Appendix A (configuration instructions)....69
16.1 Systems....69
16.2 Functions of the heating circuit....237
16.2.1 Outdoor-temperature-compensated control....237
16.2.1.1 Outdoor temperature received or sent as 0 to 10 V signal....238
16.2.1.2 Send or receive outdoor temperature over device bus....238
16.2.1.3 Gradient characteristic....239
16.2.1.4 Four-point characteristic....240
16.2.2 Fixed set point control....242
16.2.3 Underfloor heating/drying of jointless floors....242
16.2.4 Night set-back....243
16.2.4.1 Outdoor temperature for continuous day mode....243
16.2.4.2 Variable night set-back....244
16.2.4.3 Smooth transition....244
16.2.4.4 Rapid heat-up....245
16.2.5 Buffer tank systems....245
16.2.6 Summer mode....250
16.2.7 Delayed outdoor temperature adaptation....250
16.2.8 Remote operation....251
16.2.9 Optimization....252
16.2.10 Flash adaptation....252
16.2.10.1 Flash adaptation without outdoor sensor (based on room temperature)....253
16.2.11 Adaptation....253
16.2.12 Cooling control....254
16.2.13 Differential temperature control....255
16.3 Functions of the DHW circuit....256
16.3.1 DHW heating in the storage tank system....256
16.3.1.1 DHW circuit additionally controlled by a globe valve....258
16.3.2 DHW heating in the storage tank charging system....258
16.3.2.1 Cold charging protection....260
16.3.3 DHW heating in instantaneous heating system....261
16.3.4 Domestic hot water with solar system....262

16.3.5 Intermediate heating ... 263
16.3.6 Parallel pump operation ... 263
16.3.7 Circulation pump during storage tank charging ... 263
16.3.8 Priority circuit ... 264
16.3.8.1 Reverse control ... 264
16.3.8.2 Set-back operation ... 264
16.3.8.3 Stand-by mode ... 265
16.3.9 Forced charging of DHW storage tank ... 265
16.3.10 Thermal disinfection of DHW storage tank ... 265
16.4 System-wide functions ... 267
16.4.1 Automatic summer/standard time switchover ... 267
16.4.2 Frost protection ... 267
16.4.3 Forced pump operation ... 268
16.4.4 Return temperature limitation ... 268
16.4.5 Condensate accumulation control ... 269
16.4.6 Three-step control ... 269
16.4.7 On/off control ... 270
16.4.8 Continuous control ... 270
16.4.9 Releasing a control circuit/heating controller with binary input ... 270
16.4.10 Speed control of the charging pump ... 271
16.4.11 Processing an external demand ... 272
16.4.12 External demand using a 0 to 10 V signal ... 274
16.4.13 Power limitation in RK1 ... 274
16.4.14 Creep feed rate limitation with a binary input ... 275
16.4.15 Device bus ... 276
16.4.15.1 Requesting and processing an external demand ... 276
16.4.15.2 Sending and receiving outdoor temperatures ... 278
16.4.15.3 Synchronizing the clock ... 278
16.4.15.4 Priority over all controllers and return limitation ... 278
16.4.15.5 Viewing error messages issued by the device bus ... 279
16.4.16 Activating TROVIS I/O expansion modules ... 279
16.4.17 Connecting potentiometers for valve position input ... 279
16.4.18 Locking manual level ... 280
16.4.19 Locking the rotary switch ... 280
16.4.20 Feeder pump operation ... 280
16.4.21 Speed control of the circulation pump (DHW) ... 280
16.4.22 On/off cycle mode of the circulation pump (ZP) ... 281
16.4.23 External demand for heat due to insufficient heat supply ... 281
16.5 Communication ... 282
16.5.1 Ethernet interface ... 282
16.5.2 RS-485 interface for Modbus RTU communication ... 282
16.5.3 RS-485 interface for forwarding Modbus-TCP/IP communication ... 283
16.5.4 Meter bus ... 283
16.5.4.1 Activating the meter bus ... 284
16.5.4.2 Flow rate and/or power limitation with meter bus ... 285
16.5.5 Return temperature limitation based on power ... 286
16.5.6 Bluetooth® interface ... 287
16.6 Function block lists ... 289
16.7 Parameter lists ... 313
16.8 Customer-specific data ... 320

17 Appendix B ... 334
17.1 Accessories ... 334
17.2 After-sales service ... 334

1 Safety instructions and measures

Intended use

The TROVIS 5578-E Heating and District Heating Controller is used to control up to three control circuits:

- Control of a primary heat exchanger or boiler with up to two mixing heating circuit and one non-mixing heating circuit (both outdoor-temperature-compensated) and control of DHW heating in the secondary circuit
- Outdoor-temperature-compensated buffer tank control with up to two mixing heating circuits and continuous-flow hot water module
- Control of two outdoor-temperature-compensated heating circuits and a DHW heating with three valves in the primary circuit
- Control of three outdoor-temperature-compensated heating circuits with three valves in the primary circuit
- Applications with up to six control circuits are possible using optional TROVIS I/O expansion modules (linked by device bus).
- To control systems with larger numbers of control circuits, several controllers can be linked using a device bus.

The TROVIS 5578-E Heating and District Heating Controller is designed to operate under exactly defined conditions. Therefore, operators must ensure that the heating controller is only used in operating conditions that meet the specifications used at the ordering stage. In case operators intend to use the heating and district heating controller in applications or conditions other than those specified, contact SAMSON.

SAMSON does not assume any liability for damage resulting from the failure to use the device for its intended purpose or for damage caused by external forces or any other external factors.

⇨ Refer to the technical data for limits and fields of application as well as possible uses (see Chapter 3.3).

⇨ Only install the device in rooms with restricted access and protected against public access.

Access must be restricted to authorized persons to ensure that the device is only operated for its intended purpose and complies with the applicable regulations.

Reasonably foreseeable misuse

The product (TROVIS 5578-E) is not suitable for the following applications:

- Use outside the limits defined during sizing and by the technical data

Furthermore, the following activities do not comply with the intended use:

- Use of non-original spare parts
- Performing service and repair work not described

Qualifications of operating personnel

The product (TROVIS 5578-E) must be mounted, started up, serviced and repaired by fully trained and qualified personnel only; the accepted industry codes and practices must be observed. According to the mounting and operating instructions, trained personnel refers to individuals who are able to judge the work they are assigned to and recognize possible hazards due to their specialized training, their knowledge and experience as well as their knowledge of the applicable standards.

Personal protective equipment

No personal protective equipment is required for the direct handling of the product (TROVIS 5578-E).

Revisions and other modifications

Revisions, conversions or other modifications of the product (TROVIS 5578-E) are not authorized by SAMSON. They are performed at the user's own risk and may lead to safety hazards, for example. Furthermore, the product may no longer meet the requirements for its intended use.

Warning against residual hazards

The heating controller has direct influence on controlled components of the heating system (e.g. control valves and pumps). To avoid personal injury or property damage, plant operators and operating personnel must prevent hazards that could be caused in the plant components by the process medium, the operating pressure, the signal pressure or by moving parts by taking appropriate precautions. Plant operators and operating personnel must observe all hazard statements, warnings and caution notes in the referenced documents.

Responsibilities of the operator

Operators are responsible for proper use and compliance with the safety regulations. Operators are obliged to provide these mounting and operating instructions to the operating personnel and to in-

struct them in proper operation. Furthermore, operators must ensure that operating personnel or third parties are not exposed to any danger.

The operator must ensure that the heating controller is always operated with the latest firmware version.

⇨ Update the heating controller on a regular basis.

⇨ Download the currently valid firmware at: ▶ www.samsongroup.com > DOWNLOADS > Software & Drivers > Firmware

Responsibilities of operating personnel

Operating personnel must read and understand these mounting and operating instructions as well as the specified hazard statements, warnings and caution notes. Furthermore, operating personnel must be familiar with the applicable health, safety and accident prevention regulations and comply with them.

Referenced standards, directives and regulations

The product (TROVIS 5578-E) with a CE marking fulfills the requirements of the following Directives:

– RoHS Directive 2011/65/EU

– EMC Directive 2014/30/EU

– Low-voltage Directive 2014/35/EU

The declarations of conformity and certificates are included in Chapter 15.

The product (TROVIS 5578-E) with a CE marking is designed for use in low voltage installations.

⇨ For wiring, maintenance and repair, observe the relevant safety regulations.

1.1 Notes on possible severe personal injury

⚠ DANGER

Risk of fatal injury due to electric shock.

⇨ Before connecting wiring, performing any work on the device or opening the device, disconnect the supply voltage and protect it against unintentional reconnection.

⇨ Only use protective equipment that can be protected against unintentional reconnection of the power supply.

⇨ Do not remove any covers to perform adjustment work on live parts.

1.2 Notes on possible property damage

NOTICE

Risk of damage to the heating controller due to the supply voltage exceeding the permissible tolerances.

The heating controller is designed for use in low voltage installations.

⇨ Observe the permissible tolerances of the supply voltage.

NOTICE

Malfunction due to a configuration that does not meet the requirements of the application.

The heating controller is configured for specific applications by setting functions and parameters. Function and parameter settings have a direct effect on final control elements.

⇨ Perform the configuration for the specific application.

NOTICE

Manipulation of the configuration due to unauthorized access.

The heating controller can be protected against unauthorized access through entering a key number. The key number for first start-up can be found at the back of these mounting and operating instructions.

⇨ Do not pass the key number on to unauthorized persons. Keep it in a safe place inaccessible to unauthorized persons.

NOTICE

Risk of heating controller damage due to large differences in temperature.

⇨ Before start-up, wait until the heating controller has reached the ambient temperature.

NOTICE

System damage caused by frost.

Frost protection is deactivated in the manual mode.

⇨ Do not run the heating during cold weather in the manual mode for long periods of time.

2 Markings on the device

2.1 Nameplate

The nameplate shown was up to date at the time of publication of this document. The nameplate on the device may differ from the one shown.

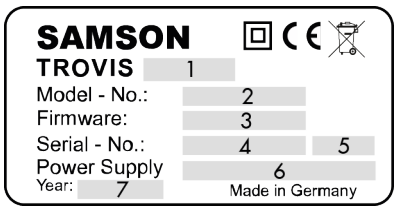

1 Type designation
2 Model number
3 Firmware version
4 Serial number
5 Fuse protection
6 Supply voltage
7 Date of manufacture

2.2 Device version

The TROVIS 5578-E Heating and District Heating Controller is available in various versions. The type designation on the nameplate indicates the heating controller version:

Type designation (nameplate)	Version
TROVIS 5578-1113	Heating and district heating controller with an RS-485 interface for Modbus RTU and device bus communication
TROVIS 5578-1114/ TROVIS 5578-1115	Heating and district heating controller with two RS-485 interfaces for separate Modbus RTU and device bus communication

These mounting and operating instructions are valid for both controller versions.

2.3 Firmware versions

The firmware depends on the controller version.

Firmware	2.50	2.51	2.61	2.62	2.63	2.64	2.66	2.68	3.06.xx	3.07.xx	3.08.xx and higher
TROVIS 5578-1113	✓	✓	✓	✓	✓	✖	✖	✓	✓	✖	✓
TROVIS 5578-1114	✖	✖	✖	✓	✓	✓	✓	✓	✓	✓	✓
TROVIS 5578-1115	✖	✖	✖	✖	✖	✖	✖	✖	✖	✓	✓

Firmware revisions	
Old	**New**
2.50	**2.51**
	Discharging protection for DHW storage tank and buffer tank
	Output of pump for continuous-flow hot water module (buffer tank systems 3.9, 5.9, 17.x and 18.x) moved from AA2 to AA4.
	Operating status reading of the DHW heating
2.51	**2.61**
	New **variable night set-back** function can be configured separately for each heating circuit (setting: CO1, CO2, CO3, CO11, CO12, CO13 → F28 - 1)
	Function blocks CO1 → F27 and CO4 → F27 added to activate the discharging protection
	Storage tank bottom sensor RüF2 can be configured as a sensor to switch off the thermal disinfection (setting: CO4 → F24 - 1)
	Free analog output assignment: configure CO5 → F34, F35, F36, F37 to determine which output signals are to be issued at AA1, AA2, AA3 and AA4.
	The values of analog outputs AA1, AA2, AA3 and AA4 are saved with 0 to 100 % in the overall system scheme.
	All the analog outputs AA1 to AA4 are available in manual mode.
	Additional buffer tank bottom sensor SF3 can be configured in CO1 → F25 - 1 setting for outdoor-temperature control.
	Another sensor can be configured as SF2 for speed control of the SLP (storage tank charging pump).
	New **speed-controlled DHW circulation pump** function to control the circulation return temperature using sensor RüF4/AF2
	Device bus addresses in the range between 11 and 19 are available for addressing the TROVIS I/O expansion modules.
2.61	**2.62**
	Internal revisions
2.62	**2.63**
	New option configurable: 3 V supply for analog outputs
	Valid range of the internal time corrected
2.63	**2.64**
	Internal revisions
2.64	**2.66**
	Optimized relay holding voltage
	Improved communication with SAM DISTRICT ENERGY web portal
	Internal revisions
2.66	**2.68**
	Release version including all pre-release versions (V 2.66A to V 2.66G)

Firmware revisions	
Old	**New**
2.68	**3.00.xx**
	External demand specified over Modbus
	Maximum return limit can be configured for buffer tank charging (systems 3.8, 3.9 and 5.9)
	New system 3.8: Same as system 3.9 without control valve HC2
	New system 20.0: continuous-flow hot water circuit with speed-controlled pump and valve
	Internal optimization
3.00.xx	**3.05.xx**
	Integration of vortex flow sensors over analog inputs AE1 to AE3
	New option configurable: 5 V supply for analog outputs
	Ratio control based on the rate of hot water being tapped can be configured for continuous-flow hot water module
	ZP on/off cycle mode
	New system 3.7: Control circuit for continuous-flow hot water module
	New systems 27.1 and 27.8: Buffer tank systems with downstream storage tank system
	Sensor correction setting for 0 to 10 V input signals in CO5 → F20
	Internal optimization
3.05.xx	**3.06.xx**
	Remote start of drying of jointless floors over Modbus register
	Display all active and resolved error messages in the alarm log
	Internal optimization
3.06.xx	**3.07.xx**
	Compliance with specifications of the Delegated Act of the Radio Equipment Directive 2014/53/EU
	Firmware downgrades (installation of older firmware versions) not possible anymore
	An active Bluetooth® interface causes all network interfaces to be locked and all active connections to be terminated.
3.07.xx	**3.08.xx**
	New **Rapid heat-up** function for HC1, HC2 and HC3; also HC11, HC12 and HC13 with TROVIS I/O
	New **Smooth transition function** upon operating mode change (day-night, night-day)
	Internal optimization
3.08.xx	**3.09.xx**
	DHW priority function through stand-by mode
	External release for DHW circuit
3.09.xx	**3.10.xx**
	Setting option added for the expected rate of hot water that will actually be tapped when vortex flow sensors are used
	'Maximum speed' parameter (in %) has been added to the SLP speed control (CO1/CO4 → F21)
	Internal optimization
3.10.xx	**3.11.xx**
	Internal optimization

NOTICE

Mandatory update for digital products and software.

The firmware is being constantly developed further. In some cases, an older firmware version than that described in this chapter may be installed in a heating controller in the delivered state.

⇨ *Update the heating controller on a regular basis.*

⇨ *Download the currently valid firmware at ▶ www.samsongroup.com > DOWNLOADS > Software & Drivers > Firmware and install it.*

Tip

The SAMSON NE53 newsletter keeps users up to date on any software or hardware revisions in accordance with NAMUR Recommendation NE 53. You can subscribe to the newsletter at ▶ www.samsongroup.com > SERVICE > NE53 newsletter.

3 Design and principle of operation

The TROVIS 5578-E Heating and District Heating Controller is used to control up to three control circuits.

- Control of a primary heat exchanger or boiler with up to two mixing heating circuit and one non-mixing heating circuit (both outdoor-temperature-compensated) and control of DHW heating in the secondary circuit
- Outdoor-temperature-compensated buffer tank control with up to two mixing heating circuits and continuous-flow hot water module
- Control of two outdoor-temperature-compensated heating circuits and a DHW heating with three valves in the primary circuit
- Control of three outdoor-temperature-compensated heating circuits with three valves in the primary circuit
- Applications with up to six control circuits are possible using optional TROVIS I/O expansion modules (linked by device bus).
- To control systems with larger numbers of control circuits, several controllers can be linked using a device bus.

The heating controller is adapted to the specific system by setting the appropriate system code number. Additional sensors and/or functions which are not part of the system's basic configuration can be selected in the function blocks. The switch positions ⟐ and entry of the key number allow access to the corresponding levels. For trained personnel, the configuration levels used to set function blocks are indicated by 'CO' and the parameter levels are indicated by 'PA'. Data is retrieved and entered at the heating controller using a rotary pushbutton.

Data input is facilitated by icons and plain text displayed on the LCD.

The rotary switch is used to set the operating mode and the key parameters required for individual circuits.

M-Bus interface

A maximum of three meters conforming to EN 13757 can be connected for data transfer. In addition, heat meters are available for flow rate and/or capacity limitation for each control circuit. Various limits can be adjusted for the following operating modes in control circuit RK1:

- Heating control only
- Heating control together with DHW heating
- DHW heating only

Outdoor-temperature-compensated flow rate or power limitation can also be implemented.

3.1 Configuration using the TROVIS-VIEW software

The heating controller can be configured with the TROVIS-VIEW software.

In this case, the TROVIS 5578-E Heating and District Heating Controller is connected to the computer over Ethernet.

The TROVIS-VIEW software enables the user to easily configure the heating controller as well as view process parameters online.

i Note

TROVIS-VIEW can be downloaded free of charge from the SAMSON website at ▶ www.samsongroup.com > DOWNLOADS > Software & Drivers > TROVIS-VIEW Further information on TROVIS-VIEW (e.g. system requirements) is available on our website and in the Data Sheet ▶ T 6661 as well as in the Operating Instructions ▶ EB 6661.

3.2 Connection to SAM DISTRICT ENERGY

The heating controller can be configured and operated on a computer, smartphone or tablet computer using the SAM DISTRICT ENERGY industry-specific application.

The heating controller is connected to SAM DISTRICT ENERGY either over the Ethernet or Modbus interface using a communication gateway.

SAM DISTRICT ENERGY allows the remote start-up and set-up of the heating controllers. Key information of the heating controller and entire heating system is clearly visualized at one central location.

i Note

SAM DISTRICT ENERGY is a web-based solution for managing, controlling and optimizing heating systems in the local heat supply and district heating networks. You can find more information and test SAM DISTRICT ENERGY using a demo account on our website at ▶ www.samsongroup.com > PRODUCTS > Digital solutions > SAM DISTRICT ENERGY .

3.3 Technical data

Table 1: *Technical data*

TROVIS 5578-E		
Inputs		14x Pt1000, PTC or Ni1000 sensor inputs, alternatively configurable for binary alarms 3x 0 to 10 V inputs Input 17 configurable for a pulse signal (3 to 800 pulses/h) of a heat meter for power limitation in RK1
Outputs		3x three-step signal, alternatively 3x on/off signal 5578-1113: Relay outputs, rating max. 250 V AC, 2 A 5578-1114/5578-1115: RK1, RK2: relay outputs, rating max. 250 V AC, 2 A; RK3: TRIAC output, rating 100 to 250 V AC, 0.12 A 5x pump output: Relay outputs, rating max. 250 V AC, 2 A All outputs are relay outputs with varistor suppression 4x 0 to 10 V or PWM signal, configurable, to issue a control signal or for pump speed control Load >5 kΩ
Interfaces		
		Ethernet interface for Modbus-TCP/IP communication and connection to SAM DISTRICT ENERGY using an Internet router Alternative access using optional external gateways M-Bus interface (mini master) for up to three M-Bus units, protocol according to EN 13757 (formerly EN 1434-3)
	TROVIS 5578-1113	Galvanically isolated RS-485 interface for Modbus-RTU and device bus communication. Data format Modbus RTU: 8N1 Bluetooth® 4.1
	TROVIS 5578-1114/ TROVIS 5578-1115	Galvanically isolated RS-485 interface for Modbus-RTU communication RS-485 interface for device bus communication Data format Modbus RTU: 8N1 Bluetooth® 5.0
Supply voltage		165 to 250 V
Power line frequency		48 to 62 Hz
Power consumption		Max. 12 VA, typical: 4.1 VA
Permissible ambient temperature range		
	Operation	0 to 55 °C
	Transportation and storage	-10 to +60 °C
Degree of protection		IP40 according to EN 60529
Class of protection		II according to EN 61140
Degree of contamination		2 according to EN 61010-1
Overvoltage category		II according to EN 60664-1
Noise immunity		According to EN 61000-6-1
Noise emission		According to EN 61000-6-3
Conformity		CE
Weight		Approx. 0.5 kg

3.4 Dimensions

Panel cut-out: 138 x 92

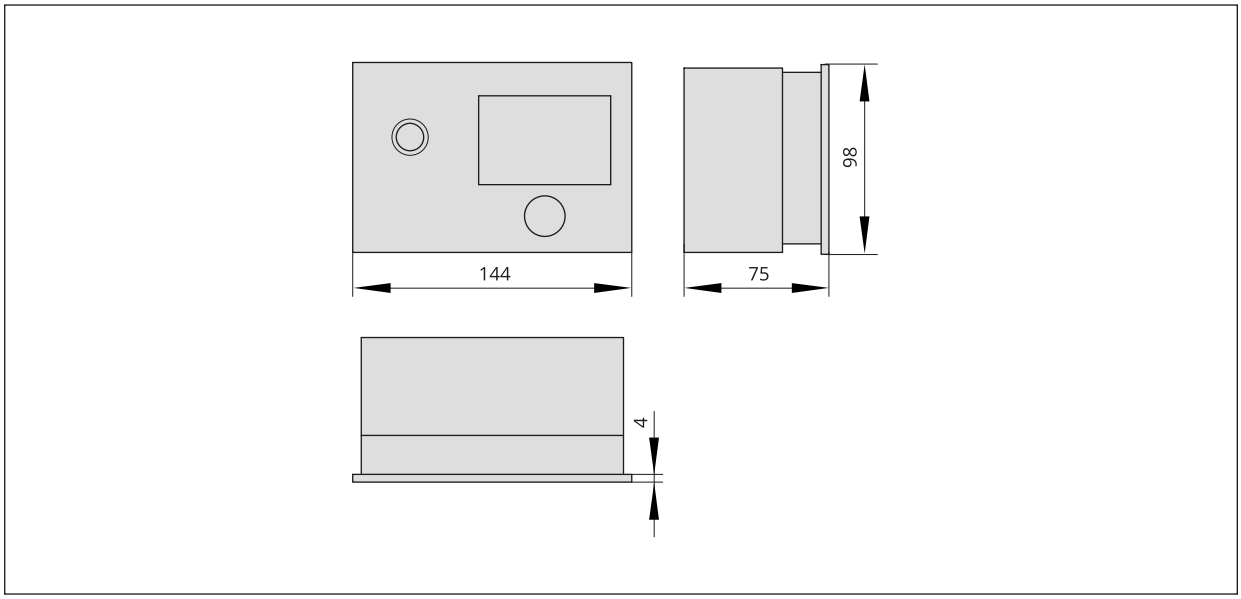

Fig. 1: *Dimensions in mm · Heating and district heating controller*

3.5 Values for resistance thermometers

Pt1000 sensors

Temperature in °C	-100	-90	-80	-70	-60	-50	-40	-35	-30	-25	-20
Resistance in Ω	602.6	643.0	683.3	723.3	763.3	803.1	842.7	862.5	882.2	901.9	921.6
Temperature in °C	-15	-10	-5	0	+5	+10	+15	+20	+25	+30	+35
Resistance in Ω	941.2	960.9	980.4	1000.0	1019.5	1039.0	1058.5	1077.9	1097.3	1116.7	1136.1
Temperature in °C	+40	+45	+50	+55	+60	+65	+70	+75	+80	+85	+90
Resistance in Ω	1155.4	1174.7	1194.0	1213.2	1232.4	1251.6	1270.8	1289.9	1309.0	1328.1	1347.1
Temperature in °C	+95	+100	+105	+110	+115	+120	+125	+130	+135	+140	+145
Resistance in Ω	1366.1	1385.1	1404.0	1422.9	1441.8	1460.7	1479.5	1498.3	1517.1	1535.8	1554.6
Temperature in °C	+150	+155	+160	+165	+170	+175	+180	+185	+190	+195	+200
Resistance in Ω	1573.3	1591.9	1610.5	1629.1	1647.7	1666.3	1684.8	1703.3	1721.7	1740.2	1758.6

PTC sensors

Temperature in °C	–20	–10	0	+10	+20	+30	+40	+50
Resistance in Ω	693	756	824	896	971	1050	1133	1220
Temperature in °C	+60	+70	+80	+90	+100	+110	+120	
Resistance in Ω	1311	1406	1505	1606	1713	1819	1925	

Type 5244 Remote Control Unit

Switch position ◴, terminals 1 and 2

Temperature in °C	10	15	20	25	30
Resistance in Ω	679	699	720	741	762

Ni1000 sensors

Temperature in °C	–60	–50	–40	–30	–20	–10	0	+10	+20	+30	+40
Resistance in Ω	695	743	791	841	893	946	1000	1056	1112	1171	1230
Temperature in °C	+50	+60	+70	+80	+90	+100	+110	+120	+130	+140	+150
Resistance in Ω	1291	1353	1417	1483	1549	1618	1688	1760	1833	1909	1986
Temperature in °C	+160	+170	+180	+190	+200	+210	+220	+230	+240	+250	
Resistance in Ω	2066	2148	2232	2318	2407	2498	2592	2689	2789	2892	

4 Shipment and on-site transport

The work described in this chapter is to be performed only by personnel appropriately qualified to carry out such tasks.

4.1 Accepting the delivered goods

After receiving the shipment, proceed as follows:

1. Compare the shipment received with the delivery note.
2. Check the shipment for transportation damage. Report any damage to SAMSON and the forwarding agent (refer to delivery note).

4.2 Removing the packaging from the heating controller

Note

Do not remove the packaging until immediately before mounting and start-up.

1. Remove the packaging from the heating controller.
2. Check scope of delivery.
3. Dispose and recycle the packaging in accordance with the local regulations.

Table 2: *Scope of delivery*

1x TROVIS 5578-E Heating and District Heating Controller
1x Document IP 5578-E EN (Important Product Information)

4.3 Transporting the heating controller

Transport instructions

- Protect the heating controller against external influences (e.g. impact).
- Protect the heating controller against moisture and dirt.
- Observe transport temperature depending on the permissible ambient temperature (see Chapter 3).

4.4 Storing the heating controller

NOTICE

Risk of heating controller damage due to improper storage.

⇨ *Observe the storage instructions.*

⇨ *Avoid longer storage periods.*

⇨ *Contact SAMSON in case of different storage conditions.*

Note

SAMSON recommends to regularly check the prevailing storage conditions during long storage periods.

Storage instructions

- Protect the heating controller against external influences (e.g. impact).
- Protect the heating controller against moisture and dirt. Store it at a relative humidity of less than 75 %. In damp spaces, prevent condensation. If necessary, use a drying agent or heating.
- Make sure that the ambient air is free of acids or other corrosive media.
- Observe transport temperature depending on the permissible ambient temperature range (see Chapter 3).
- Do not place any objects on the heating controller.

5 Installation

The work described in this chapter is to be performed only by personnel appropriately qualified to carry out such tasks.

Work position

The work position is the front view onto the operating controls on the heating controller seen from the position of operating personnel.

Operators must ensure that, after installation of the heating controller, the operating personnel can perform all necessary work safely and easily access the heating controller from the work position.

Point of installation

The device is intended for installation in rooms (usually boiler rooms) with restricted access and protected against public access to ensure that only authorized persons can enter.

This ensures that it is operated as intended and complies with regulatory requirements.

5.1 Preparation for installation

Before mounting, make sure that the following conditions are met:

– The heating controller is not damaged.

Proceed as follows:

⇨ Lay out the necessary material and tools to have them ready during mounting.

5.2 Mounting the heating controller

The heating controller consists of the housing with the electronics and the base with the terminals. It is suitable for panel, wall and rail mounting.

⇨ See Fig. 2.

Panel mounting

1. Undo the two screws (1).
2. Pull apart the controller housing and the base.
3. Make panel cut-out with the dimensions 138x92 mm (WxH).
4. Push the controller housing through the panel cut-out.
5. Tighten the two screws (2) to clamp the controller housing against the control panel.
6. Perform the electric wiring on the base as described in Chapter 5.3.
7. Remount the controller housing.
8. Tighten the two screws (1).

Wall mounting

1. Undo the two screws (1).
2. Pull apart the controller housing and the base.
3. If necessary, drill holes with the specified dimensions in the appropriate places. Fasten the base with four screws.
4. Perform the electric wiring on the base as described in Chapter 5.3.
5. Remount the controller housing.
6. Tighten the two screws (1).

Rail mounting

1. Fasten the spring-loaded hook (4) at the bottom of the top hat rail (3).
2. Slightly push the controller upwards and pull the top hook (5) over the top hat rail. Undo the two screws (1).
3. Pull apart the controller housing and the base.
4. Perform the electric wiring on the base as described in Chapter 5.3.
5. Remount the controller housing.
6. Tighten the two screws (1).

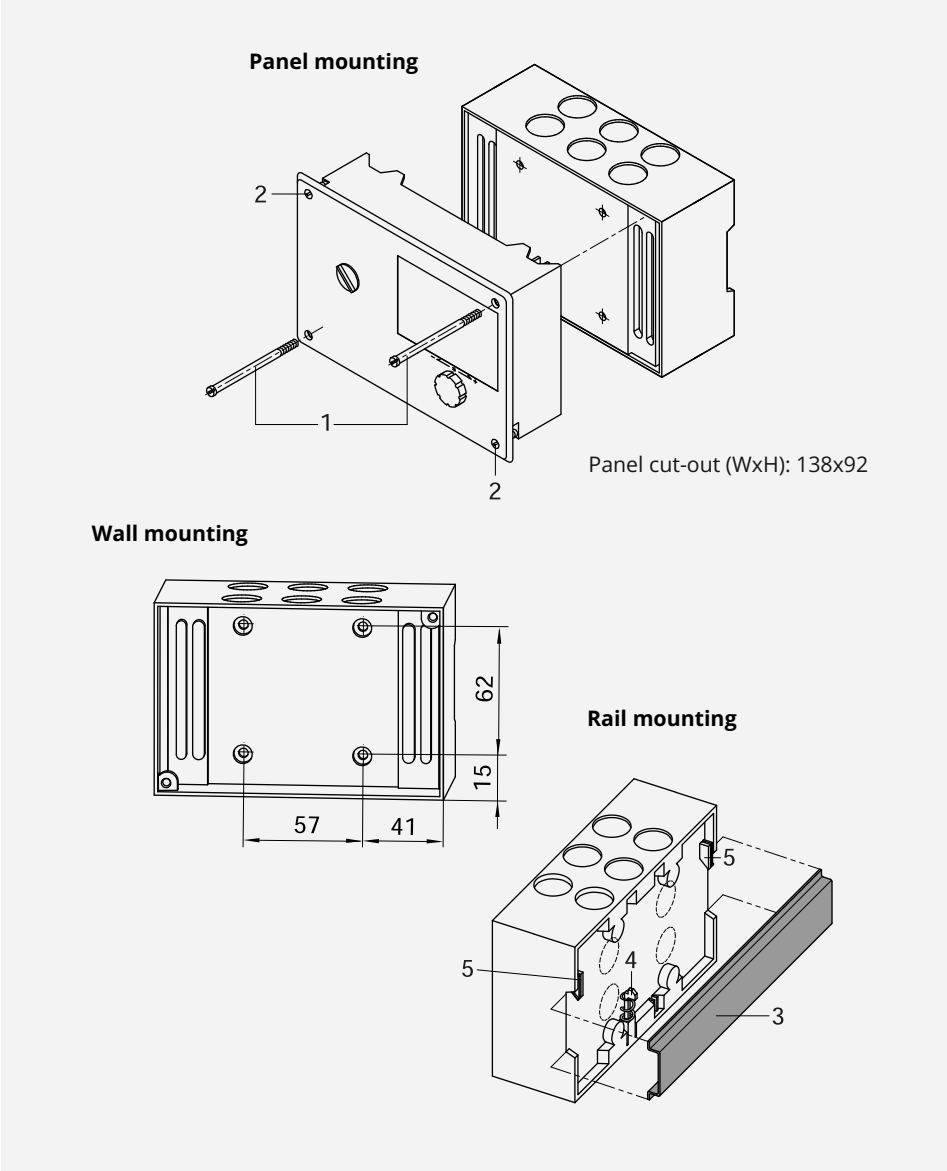

Fig. 2: *Mounting · Dimensions in mm*

5.3 Electrical connection

⚠ DANGER

Risk of fatal injury due to electric shock.

For wiring and connecting the heating controller, observe the relevant electrotechnical regulations of the country of use as well as the technical connection requirements of your local distribution system operator. Therefore, such work must be performed by properly trained and experienced personnel.

The terminals 33, 39, 42 and 45 allow the integration of safety equipment which have a direct influence on individual electric actuators and pumps. If this is not the case, connect a jumper from terminal 31 to terminals 33, 39, 42 and 45.

⇨ *Do not connect ELV cables (according to DIN VDE 0100) to these terminals.*

⇨ *Before performing any work on the terminals, disconnect the voltage supply from the heating controller.*

⇨ *Protect it against unintentional reconnection.*

Notes on electric wiring

⇨ Install the 230 V power supply lines and the signal lines separately and with sufficient space between them.

⇨ To increase immunity, keep a minimum distance of 10 cm between the lines. Make sure the minimum distance is also kept when the lines are installed in a cabinet.

⇨ Install the lines for digital signals (bus lines) and analog signals (sensor lines, analog outputs) separately and with sufficient space between them.

⇨ In systems with a high electromagnetic noise level, use shielded cables for the analog signals.

⇨ Ground the shield at one side, either at the control cabinet inlet or outlet, using the largest possible cross-section. Connect the central grounding point and the PE grounding conductor with a cable with at least 10 mm² wire cross-section using the shortest route.

⇨ Inductances in the control cabinet (e.g. contactor coils) must be equipped with suitable interference suppressors (RC elements).

⇨ Shield control cabinet elements with high field strength (e.g. transformers or frequency converters) with separators providing a good connection to the PE grounding conductor.

⇨ Use wires with wire cross-section as listed in Table 3 for the terminals.

Overvoltage protection

⇨ If signal lines are installed outside buildings or over large distances, make sure appropriate surge or overvoltage protection measures are taken. Such measures are indispensable for bus lines.

⇨ The shield of signal lines installed outside buildings must have current conducting capacity and must be grounded on both sides.

⇨ Install surge diverters at the entry of the control cabinet.

Connecting the heating controller

⇨ If the controller housing and the base have not yet been separated, undo the screws on the bottom left and top right of the front housing. Pull the controller off the base to connect the wiring.

⇨ To feed through cables, make holes in the marked locations at the top, bottom or back of the base of the housing and fit suitable grommets or cable glands.

⇨ For wall mounting: Ensure that the cables are not subject to torsion or bending by taking suitable precautions (e.g. use cable ducts) before inserting them into the base.

⇨ Connect the wiring as shown in Fig. 3 or Fig. 4.

Connecting sensors

The wire cross-section of the sensor cables must not be smaller than 0.5 mm².

Wiring of a room panel

⇨ Connect as shown in Fig. 5, Fig. 6 and Fig. 7.

Connecting the water flow sensor

⇨ Connect as shown in Fig. 9.

Connecting electric actuators

⇨ 0 to 10 V output: Use cables with a minimum wire cross-section of 0.5 mm².

⇨ Three-step or on/off outputs: Connect cables with a minimum wire cross-section of 1.5 mm² suitable for damp locations to the terminals of the controller output. We recommend checking the operating direction on start-up.

Connecting pumps

⇨ Connect all cables with at least a 1.5 mm² wire cross-section to the terminals of the heating controller as illustrated in the wiring diagram.

---

i ***Note***

The electric actuators and pumps are not automatically supplied with a voltage by the heating controller.

They can be connected over terminals 33, 39, 42 and 45 to an external voltage supply. For an internal power supply, place a jumper from terminal 31 to terminals 33, 39, 42 and 45.

⚠ DANGER

Risk of fatal injury as a result of failing to observe the permissible touch voltage.

Separation of the circuits is absolutely essential when SELV equipment is connected to terminals 33, 39, 42 and 45 as this equipment has a different intended use of the supply voltage than specified in the technical data (230 V AC).
The creepage and clearance present in the base and heating controller do not guarantee the required dielectric strength and the safe separation of the 230 V supply voltage and the other circuits.

⇨ *Take appropriate safety precautions (e.g. by using coupling relays for the control of electric actuators operated with 24 V or for ELV fault signaling contacts).*

⇨ *Only connect 230 V equipment.*

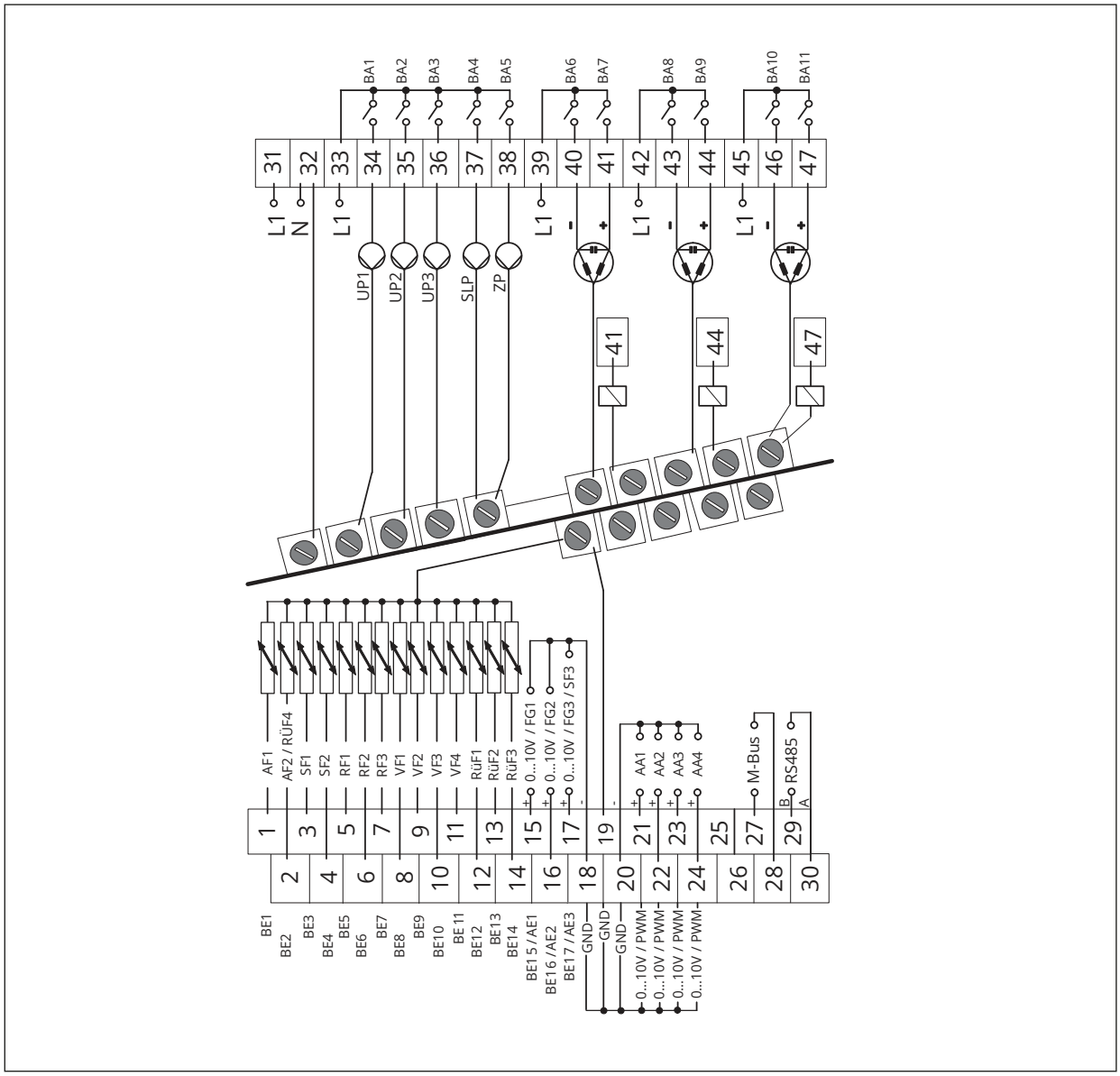

Fig. 3: *Electrical connection · TROVIS 5578-1113*

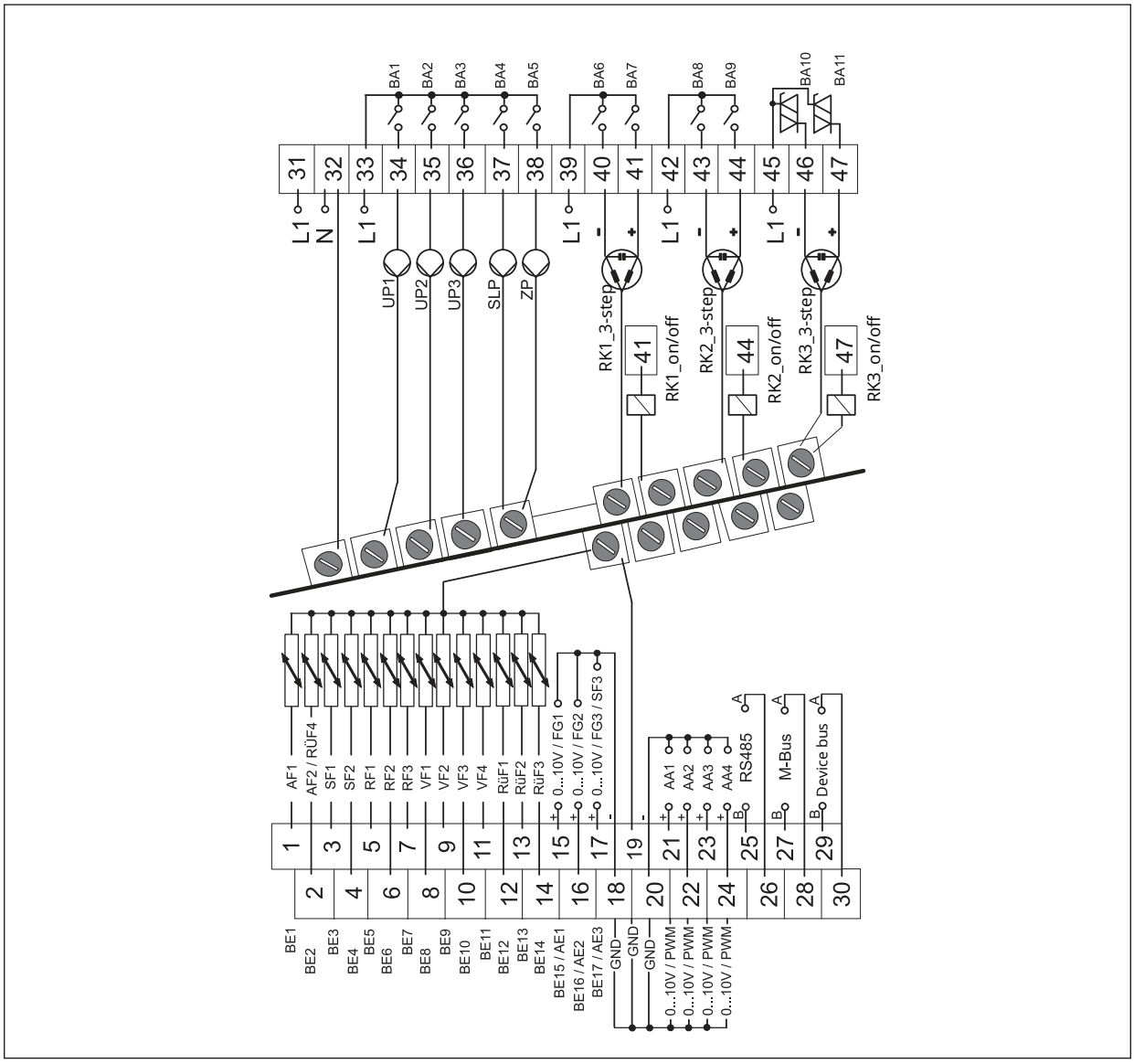

Fig. 4: *Electrical connection · TROVIS 5578-1114/TROVIS 5578-1115*

Abbreviations

AA	Analog output
AE	Analog input
AF	Outdoor sensor
BA	Binary output
BE	Binary input
FG	Potentiometer
PWM	Pulse width modulation
RF	Room sensor
RK	Control circuit
RüF	Return sensor
SF	Storage tank sensor
SLP	Storage tank charging pump
UP	Circulation pump (heating)
VF	Flow sensor
ZP	Circulation pump (DHW)

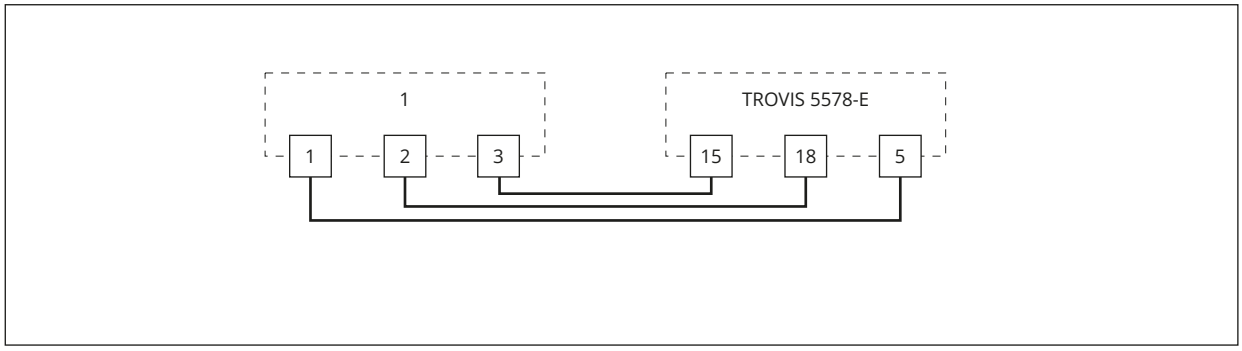

Fig. 5: *Wiring of a room panel for RK1*

1 Type 5257-5(x) Room Panel; Type 5244 no longer available.

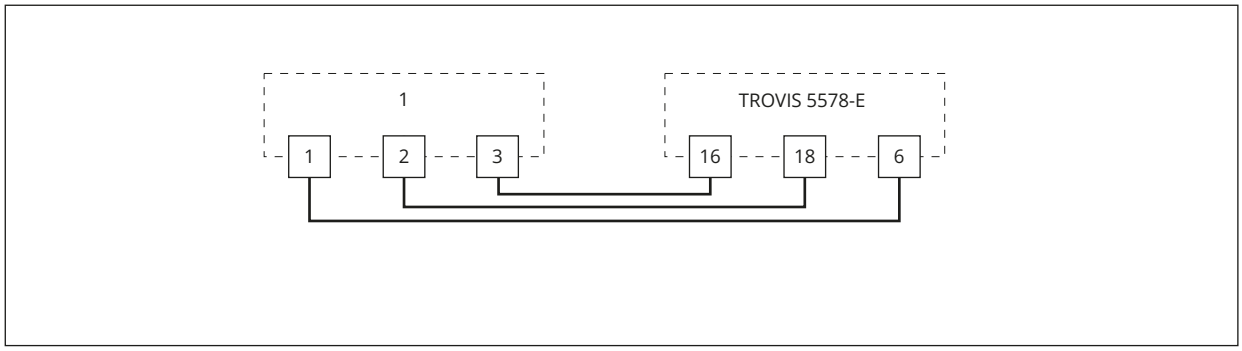

Fig. 6: *Wiring of a room panel for RK2*

1 Type 5257-5(x) Room Panel; Type 5244 no longer available.

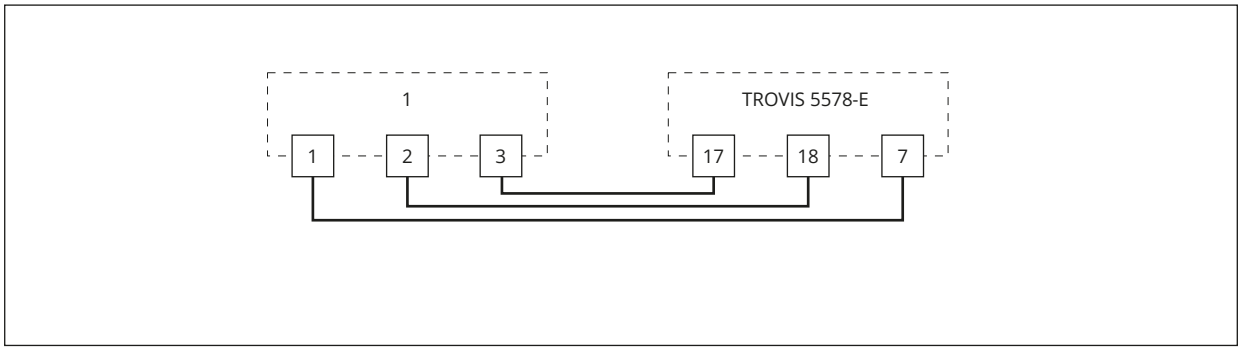

Fig. 7: *Wiring of a room panel for RK3*

1 Type 5257-5(x) Room Panel; Type 5244 no longer available.

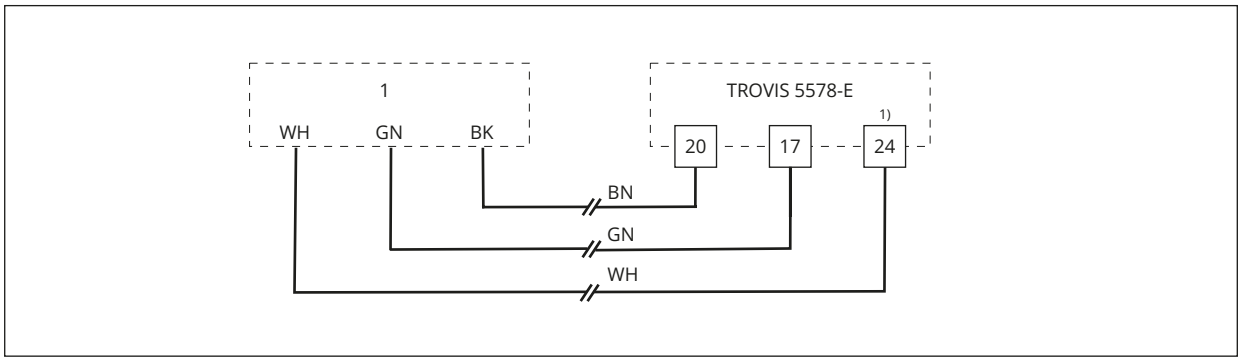

Fig. 8: *Connection of a water flow sensor*

1 Water flow sensor

Water flow sensor		Extension cable		TROVIS 5578-E
GND	BK	BN		20
Signal	GN	GN		17
5 V	WH	WH		24[1)]

1) With default setting; alternatively, it is possible to connect to terminals 21, 22 and 23

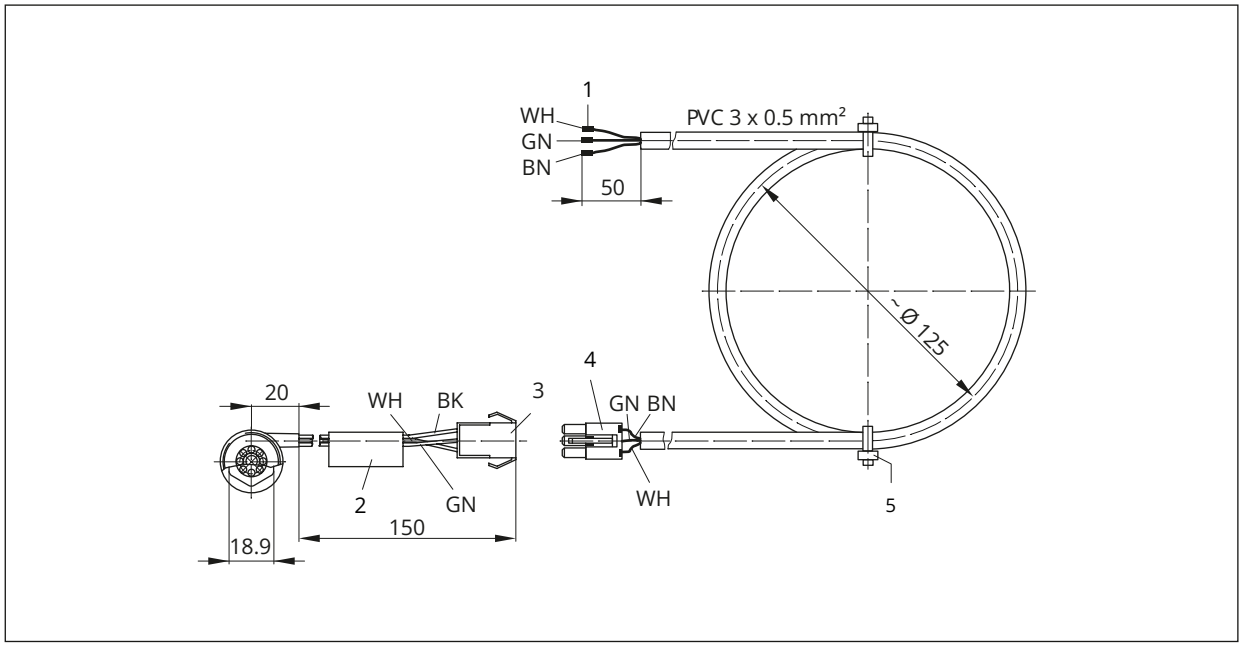

Fig. 9: *Extension cable for water flow sensor*

WH White
GN Green
BN Brown
BK Black
1 Wire end ferrule
2 Nameplate
3 Bushing
4 Connector
5 Cable tie

NOTICE

A flow rate measurement is not performed when the wrong model of the water flow sensor is used.

⇨ *Only use the sensor model specified in Chapter 17.1.*

Table 3: *Permissible conductor cross-section for terminals*

Cable	Conductor cross-section
Single-wire	0.33 to 2 mm²
Multi-wire	0.33 to 2 mm²

Length of insulation to be stripped off the conductor ends: 6 mm

6 Operation

The heating controller is operated on site using the operating controls on the front.

6.1 Interfaces

6.1.1 RS-485 interfaces for Modbus-RTU and device bus communication

TROVIS 5578-1113 is fitted with a galvanically isolated RS-485 interface that is suitable for the following connection options:

- Device bus communication for connection of up to 32 bus devices
- Modbus RTU communication with a control system
- Modbus RTU communication for connection of a SAM MOBILE Gateway to access the SAM DISTRICT ENERGY web portal
- Multiplex mode (Modbus TCP/IP access to the bus devices connected to the RS-485 interface that can also be operate using device bus communication)

TROVIS 5578-1114 and TROVIS 5578-1115 are fitted with two galvanically isolated RS-485 interfaces for separate Modbus RTU and device bus communication.

6.1.2 Ethernet interface for Modbus-TCP/IP communication

- Modbus-TCP/IP communication with a control system
- Communication the SAM DISTRICT ENERGY web portal without the use of a communication gateway: the MAC address of the heating controller is used to register it (specified on the controller housing, starting with **00:E0:99:Fx:xx:xx**). For reasons of data security, the heating controller must be registered in the web portal within six hours after the controller has been started. Restarting the heating controller resets this time and allows the controller to be registered after a timeout.

6.1.3 M-Bus interface

Data transmission of up to three meters according to EN 13757 (see Chapter 16).

6.2 Operating controls

The operating controls are located in the front panel of the heating controller.

The rotary pushbutton is used to select readings, parameters and function blocks.

The rotary switch is used to set the operating mode and the key parameters for each control circuit.

Rotary pushbutton

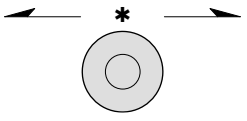

Turn
Select readings, parameters and function blocks.

Press
Confirm adjusted selection or settings.

Rotary switch

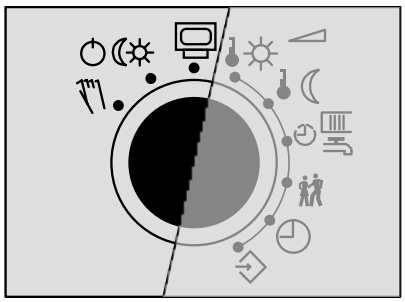

Operating level
Operating modes
Manual level

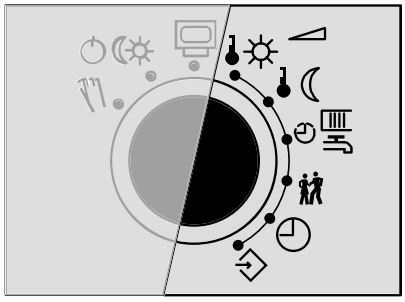

Day set point (rated room temperature)
Night set point (reduced room temperature)
Times-of-use for heating/DHW
Special time-of-use
Time/date
Settings (parameter and configuration level)

6.3 Operating the heating controller on a smartphone

The TROVIS 5578-E Heating and District Heating Controller can be operated on a smartphone. Access to the myTROVIS app is required in this case.

myTROVIS POWERED BY SAMSON Deine Regler WebApp

▶ myTROVIS

6.4 Accessories

Table 4: *Accessories*

TROVIS I/O (expansion module)	Order no. 100062999
TROVIS-VIEW software (free of charge)	▶ www.samsongroup.com > DOWNLOADS > Software & Drivers > TROVIS-VIEW
myTROVIS web app	▶ myTROVIS
Surge arrester SA 5000	Order no. 1400-9868
▶ SAM MOBILE+ Gateway for communication using mobile phone networks	Type 5656

7 Start-up and configuration

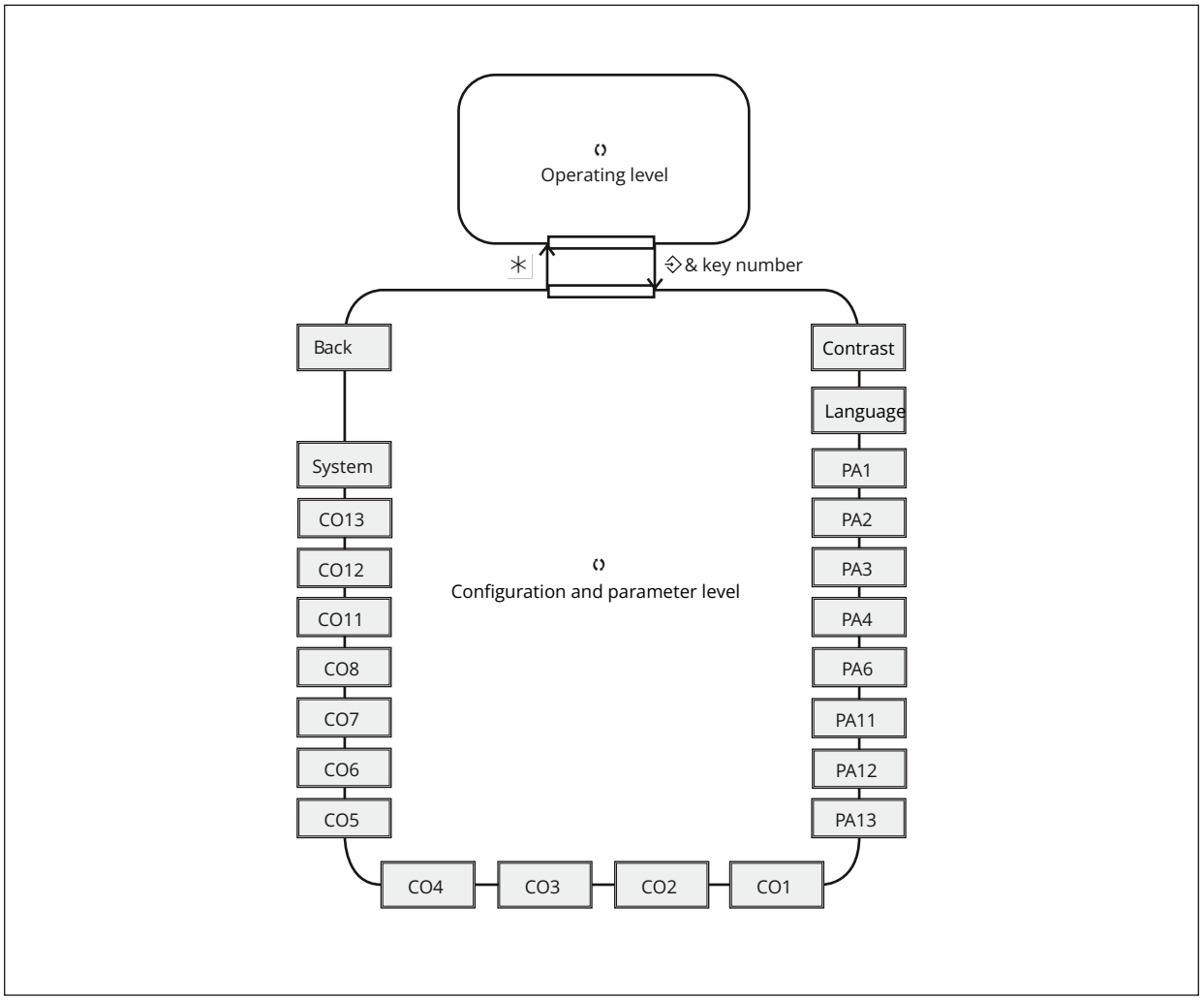

Fig. 10: *Level structure of TROVIS 5578-E*

Legend for level structure

PA1/CO1:	HC1 (heating circuit 1)
PA2/CO2:	HC2 (heating circuit 2)
PA3/CO3:	HC3 (heating circuit 3)
PA4/CO4:	DHW circuit
PA11/CO11:	HC11 (heating circuit 11)
PA12/CO12:	HC12 (heating circuit 12)
PA13/CO13:	HC13 (heating circuit 13)
CO5:	System-wide
PA6/CO6:	Communication
CO7:	Device bus
CO8:	Binary inputs
Attachments:	System code number

The work described in this chapter is to be performed only by personnel appropriately qualified to carry out such tasks.

⇨ **Before start-up, make sure the following conditions are met:**

– The heating controller is properly mounted according to the instructions.
– The electrical connection is properly performed.
– The firmware corresponds to the version that is currently available.

The currently valid firmware can be downloaded at ▶ www.samsongroup.com > DOWNLOADS > Software & Drivers > Firmware (see Chapter 10).

The heating controller is adapted to its control task by performing start-up. Start-up usually involves performing several steps:

1. Change the contrast of the display to adapt it to the installation conditions (see Chapter 7.1).
2. Change the display language as required for the operating personnel (see Chapter 7.2).
3. Select the hydraulic schematics (see Chapter 7.3).
4. Change functions and parameters to adapt the system (see Chapters 7.4 and 7.5).
5. Calibrate the sensors (see Chapter 7.6).

The modifications of the controller configuration and parameter settings described in this chapter can only be performed after the valid key number has been entered.

The valid key number for first start-up can be found at the back of these mounting and operating instructions. To avoid unauthorized use of the service key number, remove the page or make the key number unreadable. In addition, it is possible to enter a new, customized key number (see Chapter 7.7).

7.1 Changing the display contrast

The contrast of the display can be changed to adapt it to the installation conditions.

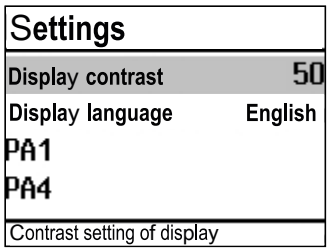

Turn the rotary switch to ⚙ (settings).
() Enter the currently valid key number.
✳ Confirm key number.
() Select 'Display contrast'.
✳ Activate editing mode for the display contrast. The current setting is shown inverted on the display.
() Change the display contrast.
✳ Confirm setting.
Turn the rotary switch to 🖵 (operating level).

7.2 Changing the display language

The default display language is German. After additional language files have been downloaded onto the controller, the display language can be changed as follows:

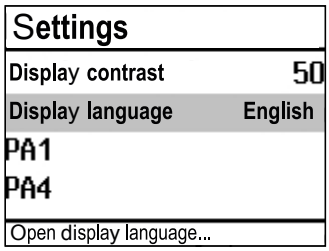

Turn the rotary switch to ⚙ (settings).
() Enter the currently valid key number.
✳ Confirm key number.
() Select 'Display language'.
✳ Activate editing mode for the language setting. The currently valid language is selected.
() Change the language setting accordingly.
✳ Confirm setting.
Turn the rotary switch to 🖵 (operating level).

7.3 Setting the system code number

Different hydraulic schematics are available. Each hydraulic schematic is represented by a system code number. The systems are shown together with their ready-configured functions (see Chapter 16).

A system is adapted to individual requirements by setting the functions and parameters. Changing the system code number resets previously adjusted function blocks to their default settings. Function block parameters and parameter level settings remain unchanged.

The system code number is set in the configuration and parameter level.

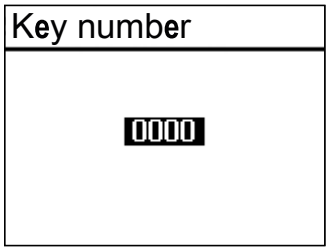

Turn the rotary switch to ⚙ (settings).
- ↺ Enter the currently valid key number.
- ✳ Confirm key number.

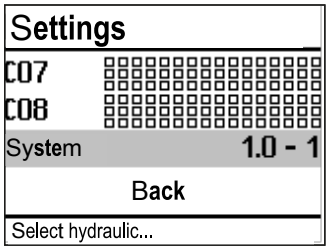

- ↺ Select 'System'.
- ✳ Open 'System'.

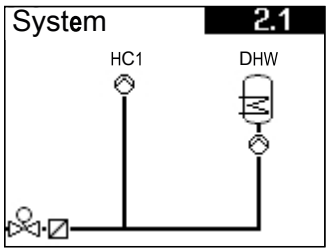

- ↺ Select a system (see Chapter 16).

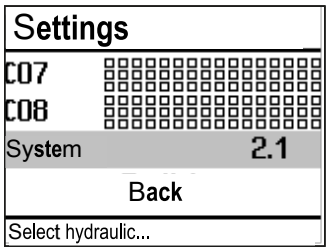

- ✳ Confirm the system selected.
- ↺ Select 'Back'.
- ✳ Exit menu.

Turn the rotary switch to 🖵 (operating level).

7.4 Activating and deactivating functions

A function is activated or deactivated in the associated function block. "Appendix A (configuration instructions)" contains a detailed description of all functions.

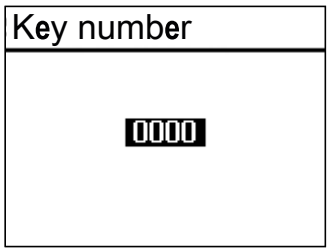

Turn the rotary switch to ⚙ (settings).
- ↺ Enter the currently valid key number.
- ✳ Confirm key number.

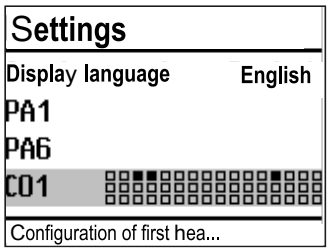

- ↺ Select the required configuration level.
  - CO1: Heating circuit HC1
  - CO2: Heating circuit HC2
  - CO3: Heating circuit HC3
  - CO11: Heating circuit HC11
  - CO12: Heating circuit HC12
  - CO13: Heating circuit HC13
  - CO4: Domestic hot water (DHW)
  - CO5: System-wide functions
  - CO6: Modbus communication

  Active function blocks are indicated by the black squares.
  - ⇨ Only the configuration levels that can be controlled by the selected system are available for selection.

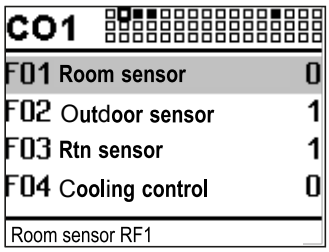

- ✳ Open the configuration level.
  The first function block is selected (highlighted in gray).
- ↺ Select the required function.

  Functions without function block parameters:
- ✳ Activate editing mode for the function.
  The currently active configuration '0' or '1' is shown inverted on the display.
- ↺ Activate function (1) or deactivate function (0).
- ✳ Confirm configuration.

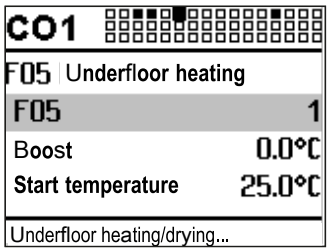

  Functions with function block parameters:
- ✳ Open function.
- ↺ Select configuration.
- ✳ Activate editing mode for configuration.
  The currently active configuration '0' or '1' is shown inverted on the display.
- ↺ Activate function (1) or deactivate function (0).
- ✳ Confirm configuration.
- ↺ Select function block parameter.
- ✳ Activate editing mode for the function block parameter.
  The current setting is shown inverted on the display.
- ↺ Set function block parameter.

  Proceed in the same manner to set further function blocks.

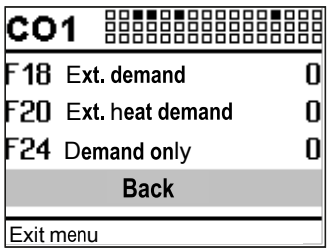

Exit the configuration level:
- ↺ Select 'Back'.
- ✳ Exit the configuration level.

To adjust further function blocks in other configuration levels, repeat steps highlighted in gray.

Turn the rotary switch to 🖵 (operating level).

i Note

All function block settings are saved in a non-volatile memory in the heating controller.

7.5 Changing parameters

Depending on the system code number selected and the activated functions, not all parameters will be available. "Appendix A (configuration instructions)" contains a detailed description of all parameters.

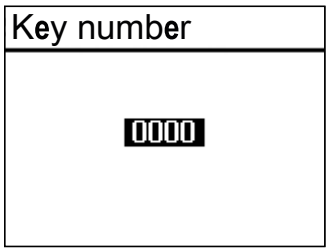

Turn the rotary switch to ⚙ (settings).
- ↺ Enter the currently valid key number.
- ✳ Confirm key number.

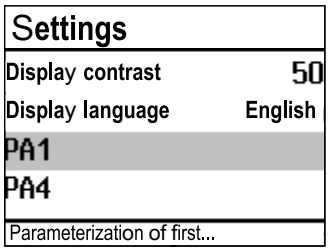

- ↺ Select the required parameter level.
  - PA1: Heating circuit HC1
  - PA2: Heating circuit HC2
  - PA3: Heating circuit HC3
  - PA11: Heating circuit HC11
  - PA12: Heating circuit HC12
  - PA13: Heating circuit HC13
  - PA4: Domestic hot water (DHW)
  - PA5: Boiler circuit of buffer tank systems
  - PA6: Modbus communication

  ⇨ Only the parameter levels that can be controlled by the selected system are available for selection.

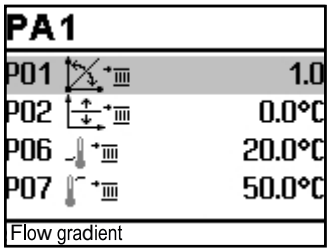

- ✳ Open the parameter level.
  The first parameter is selected (highlighted in gray).
- ↺ Select the parameter.
- ✳ Activate editing mode for the parameter.
  The current setting is shown inverted on the display.
- ↺ Set the parameter.
- ✳ Confirm setting.

Proceed in the same manner to change further parameters.

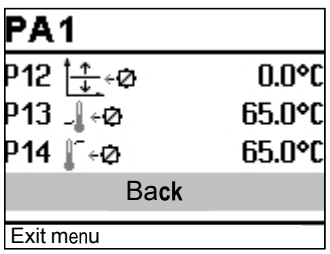

Exit the parameter level:
- ↺ Select 'Back'.
- ✳ Exit the configuration level.

To adjust further function blocks in other configuration levels, repeat steps highlighted in gray.
Turn the rotary switch to ▣ (operating level).

i Note

All function block settings are saved in a non-volatile memory in the heating controller.

7.6 Calibrating sensors

Temperature sensors are used to measure various temperatures. These sensors are connected to the heating controller. The heating controller is designed for connection of Pt1000, PTC and Ni1000 sensors.

– CO5 → F01 - 1, F02 - 0: Pt 1000
– CO5 → F01 - 0, F02 - 0: PTC
– CO5 → F01 - 1, F02 - 1: Ni 1000

⇨ See Chapter 3.5 for sensor resistance tables.

If the temperature values displayed at the heating controller differ from the actual temperatures, the measured values of all connected sensors can be recalibrated. To calibrate a sensor, the currently displayed value must be changed to match the temperature (reference temperature) measured directly at the point of measurement.

⇨ Activate calibration in CO5 with F20.
⇨ Delete the incorrectly performed calibration with F20 - 0.

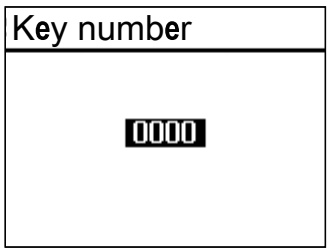

Turn the rotary switch to ⚙ (settings).
↺ Enter the currently valid key number.
✳ Confirm key number.

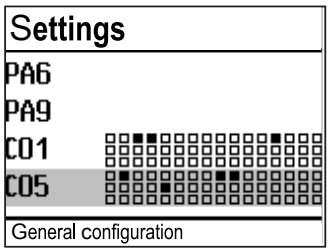

↺ Select CO5 configuration level.
✳ Open CO5 configuration level.
↺ Select function block F20.
✳ Activate editing mode for function block F20.

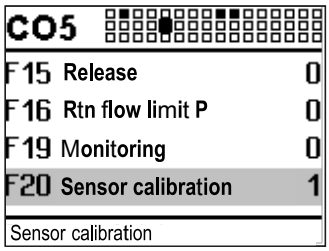

↺ Select F20 configuration.
✳ Activate editing mode for configuration.
The currently active configuration '0' or '1' is shown inverted on the display.
↺ Activate function block ('1').
✳ Confirm activation.

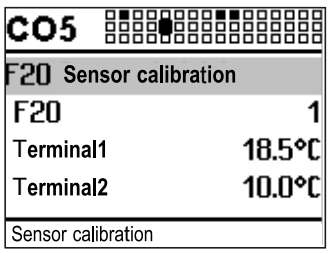

↺ Select the temperature that you want to calibrate.
✳ Open calibration.
The temperature is shown inverted on the display.
↺ Correct measured value.
Read the actual temperature directly from the thermometer at the point of measurement and enter this value as the reference temperature.
✳ Confirm corrected measured value.

Proceed in the same manner to calibrate further sensors.

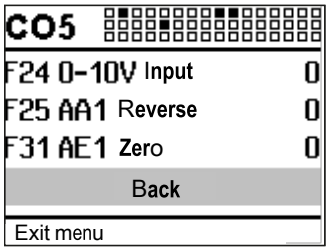

Exit the configuration level:

- Select 'Back'.
- Exit the configuration level.

Turn the rotary switch to (operating level).

7.6.1 Special values

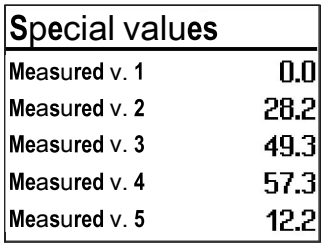

If sensor inputs not relevant to closed-loop control are connected, the 'Special values' screen is automatically displayed in the heating controller's operating level.

A maximum of five measured values (sensor inputs or 0 to 10 V inputs) can be displayed. These readings are displayed without a unit. '°C' is the unit for all sensor inputs.

The values that have been configured with CO5 → F24 - 1 and originate from the 0 to 10 V inputs are displayed in % (percent).

Measured value number	Terminal number
1	1
2	2
3	3
4	4
5	5
6	6
7	8
8	9
9	10
10	11
11	12
12	13
132	15
14	16
15	17
16	7
17	14

7.7 Entering customized key number

To prevent the function and parameter settings being changed by unauthorized users, a customized key number can be added to the fixed service key number. You can select a customized key number between 0100 and 1900.

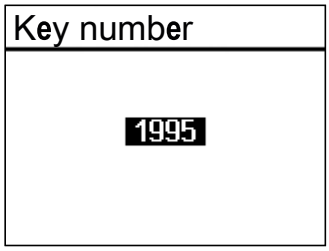

Turn the rotary switch to ⚙ (settings).
- ↻ Enter key number 1995.
- ✳ Confirm key number.
- ↻ Enter valid key number.
- ✳ Confirm key number.
- ↻ Enter customized key number.
- ✳ Confirm customized key number.

This number is the new valid key number.
Turn the rotary switch to 🖵 (operating level).

8 Set-up

8.1 Selecting the operating mode

The heating controller can be operated in the following modes:

Day mode (rated operation):

Regardless of the programmed times-of-use and summer mode, the set points relevant to rated operation are used by the controller.

Icon:

Night mode (reduced operation):

Regardless of the programmed times-of-use, the set points relevant to reduced operation are used by the controller.

Icon:

Control operation deactivated:

Regardless of the programmed times-of-use, control operation of the heating circuits and DHW heating remains deactivated. The frost protection is activated, if need be.

Icon:

Icons when the frost protection is activated: HC
DHW

Automatic mode:

During the programmed times-of-use, the controller works in day mode (rated operation). Outside these times-of-use, the controller is in night mode (reduced operation), provided control operation has not been deactivated due to the outdoor temperature. The heating controller switches automatically between both operating modes.

Icon within the times-of-use:

Icon outside the times-of-use:

Manual mode:

Valves and pumps can be controlled manually (see Chapter 8.6 for further details).

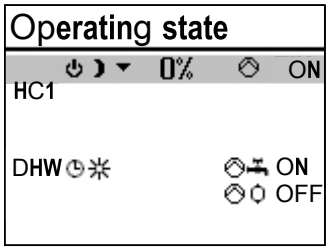

Turn the rotary switch to (operating modes).
The operating states of all system control circuits are displayed:
- Heating circuit HC1
- Heating circuit HC2
- Heating circuit HC3
- Heating circuit HC11
- Heating circuit HC12
- Heating circuit HC13
- DHW heating

Only the control circuits that can be controlled by the selected system are available for selection.

Select the control circuit.

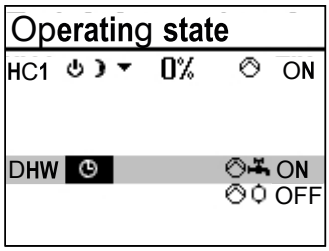

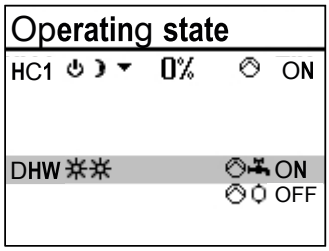

∗ Activate editing mode for the control circuit.
The operating mode is shown inverted on the display.
ↀ Select operating mode:
- Automatic mode
- Day mode
- Night mode
- System deactivated

∗ Confirm the operating mode.

The heating controller is usually in the automatic mode.

8.2 Schedules

The controller operates according to the programmed schedules in automatic mode.

8.2.1 Setting the time and date

The current time and date need to be set immediately after start-up and after a power failure lasting more than 24 hours. This is the case when the time blinks on the display.

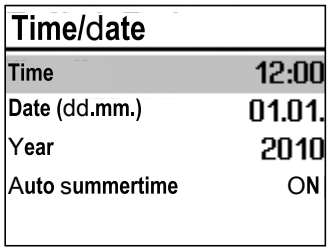

Turn the rotary switch to ⏲ (time/date).
The current time is selected (highlighted in gray).

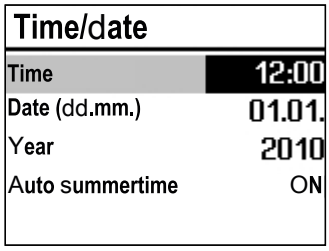

∗ Activate editing mode for the time.
The time reading is inverted.
ↀ Change the time.
∗ Confirm the time setting.

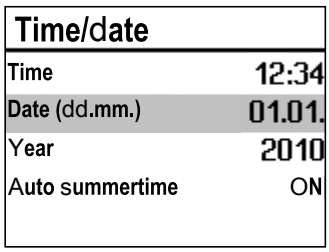

ↀ Select 'Date' (dd.mm).

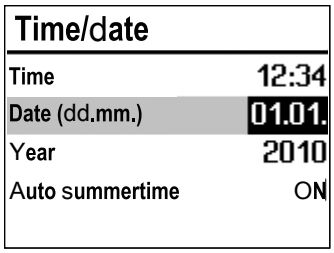

∗ Activate editing mode for the date.
The date reading is inverted.
◊ Change date (day.month).
∗ Confirm the date setting.

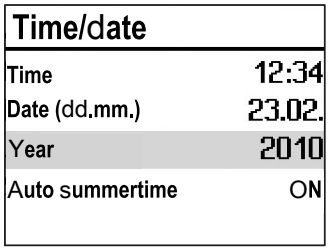

◊ Select 'Year'.

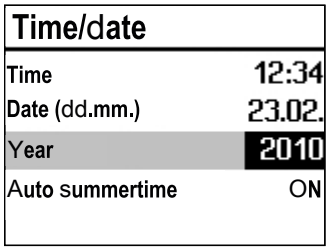

∗ Activate editing mode for the year.
The year reading is inverted.
◊ Change the year.
∗ Confirm the year setting.

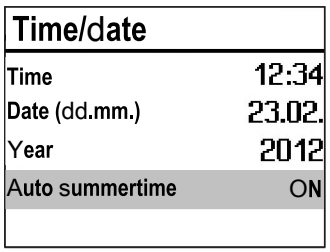

Deactivate or activate the automatic summer/standard time switchover as required.
◊ Select automatic summer/standard time switchover.

∗ Activate the editing mode for automatic summer/standard time switchover.
The current setting is shown inverted on the display:
ON = Summer/standard time switchover active
OFF = Summer/standard time switchover not active

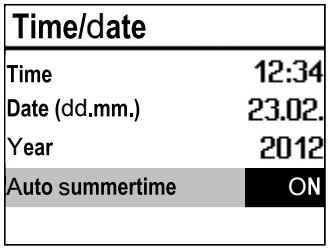

◊ Deactivate or activate the automatic summer/standard time switchover.
∗ Confirm deactivation/activation.
Turn the rotary switch to ⎙ (operating level).

i *Note*

The correct time remains displayed after a power failure of 24 hours. Normally, the time is still correct at least 48 hours after a power failure.

8.2.2 Setting the times-of-use

Three times-of-use can be programmed for each day of the week.

Parameters	Default		Value range
	HC1, HC2, HC3, HC11, HC12, HC13	DHW, ZP	
Start first time-of-use	06:00	00:00	
Stop first time-of-use	22:00	24:00	
Start second time-of-use	--:--	--:--	00:00 to 24:00 h
Stop second time-of-use	--:--	--:--	in steps of 15 minutes
Start third time-of-use	--:--	--:--	
Stop third time-of-use	--:--	--:--	

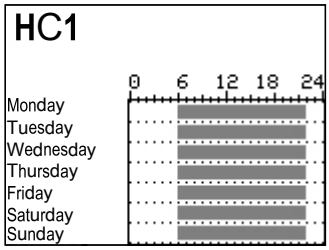

Turn the rotary switch to ⏲ (times-of-use).
The first control circuit is displayed together with its programmed times-of-use.

- ↺ Program the times-of-use of another control circuit, if required:
  - Heating circuit HC2
  - Heating circuit HC3
  - Heating circuit HC11
  - Heating circuit HC12
  - Heating circuit HC13
  - DHW heating
  - Circulation pump ZP

Only the control circuits that can be controlled by the selected system are available for selection.

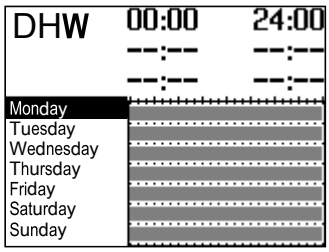

✳ Activate editing mode for the control circuit. The times-of-use for Monday are displayed.

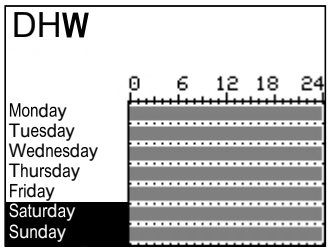

↺ Select period/day for which the times-of-use are to be valid. The times-of-use can be programmed for individual days or for a block of days, e.g. Monday to Friday, Saturday and Sunday or Monday to Sunday. The selected days are shown inverted on the display.

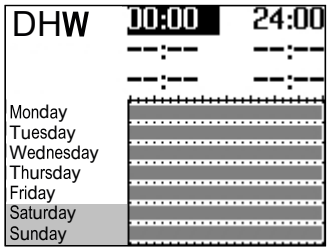

✳ Activate editing mode for the period/day.
The start time of the first time-of-use period can now be edited (inverted reading).
↺ Change start time.
The time is set in steps of 15 minutes.
✳ Confirm the start time.
The stop time of the first time-of-use period can now be edited.
↺ End stop time.
The time is set in steps of 15 minutes.

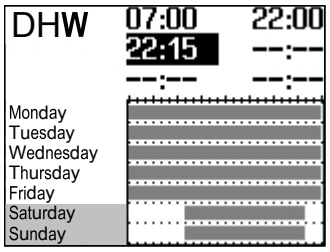

∗ Confirm the stop time.
The start time of the second time-of-use period can now be edited.

To set the second and third times-of-use periods, repeat steps highlighted in gray. If no further times-of-use are to be programmed for the selected time period/day, exit the menu by confirming the indicated start time twice (2x ∗). Proceed in the same manner to program further periods/days.

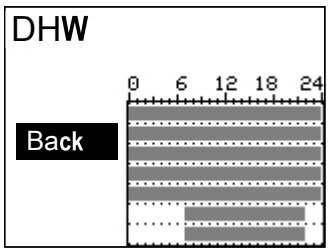

After setting all times-of-use:

ↀ Select 'Back'.

∗ Exit the times-of-use setting.

Turn the rotary switch to ⊟ (operating level).

8.2.3 Setting the party timer (special time-of-use)

Rated operation in the corresponding control circuit (HC1, HC2, HC3 or DHW) is started or continued for the time period set in the party mode. When the countdown has finished, the party timer returns to --:--.

Parameters	Default	Value range
HC1 party timer	--.-- h	0 to 48 h; in steps of 15 minutes
HC2 party timer	--.-- h	0 to 48 h; in steps of 15 minutes
HC3 party timer	--.-- h	0 to 48 h; in steps of 15 minutes
DHW party timer	--.-- h	0 to 48 h; in steps of 15 minutes

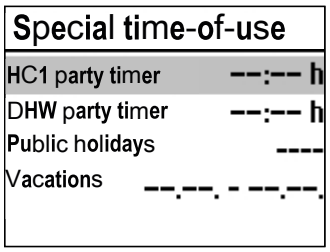

Turn the rotary switch to ⛹ (special times-of-use).
The party timer for the first control circuit is now selected.

ↀ Program the times-of-use of another control circuit, if required:
- Heating circuit HC2
- Heating circuit HC3
- DHW heating

Only the control circuits that can be controlled by the selected system are available for selection.

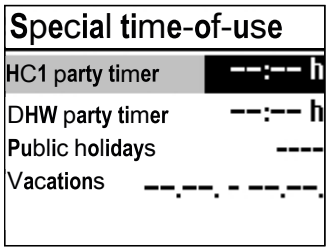

∗ Activate editing mode for the party timer.
The party timer is now in the editing mode (inverted display).

ↀ Extend day mode as required.
The time is set in steps of 15 minutes.

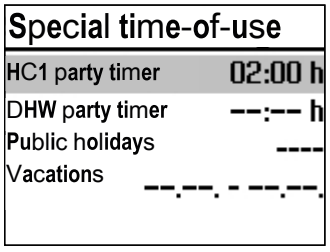

∗ Confirm setting.
After setting the party timer:
Turn the rotary switch to ⊟ (operating level).

i ***Note***

The party timer runs down in steps of 15 minutes.

8.2.4 Programming public holidays (special times-of-use)

On public holidays, the times-of-use specified for Sunday apply.

A maximum of 20 public holidays can be entered.

Parameters	Default	Value range
Public holidays	--.--	01.01 to 31.12

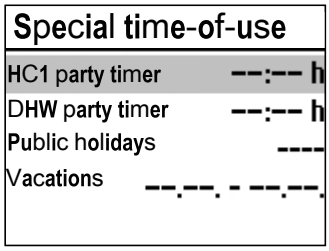

Turn the rotary switch to ⚒ (special times-of-use).
The party timer for the first control circuit is now selected.
↻ Select 'Public holidays'.

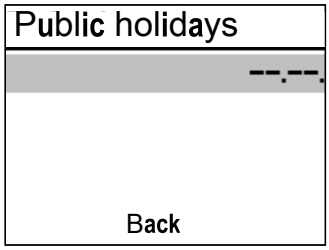

∗ Start the public holiday setting.
The first public holiday setting is now selected. --:-- is displayed if no public holidays (default setting) have been programmed.
↻ If applicable, select '--:--'.

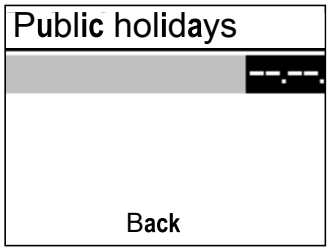

∗ Activate the editing mode for public holidays.
↻ Set the date of the public holiday.
∗ Confirm the date.
Proceed in the same manner to program further public holidays.

Deleting public holidays:
↻ Select the holiday you wish to delete.
∗ Confirm the date.
↻ Select '--:--'.
∗ Confirm setting.
The public holiday is deleted.

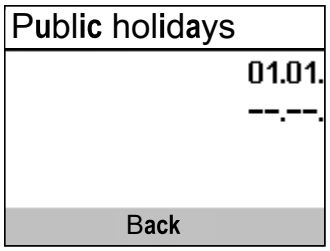

After programming all public holidays:
- ↺ Select 'Back'.
- ✳ Exit the public holiday setting.

Turn the rotary switch to ⧉ (operating level).

i *Note*

Public holidays that are not assigned to a specific date should be deleted by the end of the year so that they are not carried over into the following year.

8.2.5 Programming vacation periods (special times-of-use)

The system runs constantly in reduced mode during vacation periods. A maximum of ten vacation periods can be entered. Each vacation period can be separately assigned to the heating circuits HC1, HC2, HC3 and DHW circuit or to all the control circuits in one go.

i *Note*

If a vacation period is programmed to apply to all control circuits, it also applies to control circuits HC11, HC12 and HC13.

Parameters	Default	Value range
Vacation period	--.-- - --.--	01.01 to 31.12

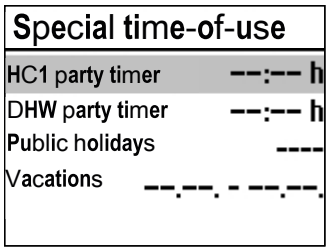

Turn the rotary switch to ⚒ (special times-of-use).
The party timer for the control circuit is now selected.
- ↺ Select 'Vacations'.

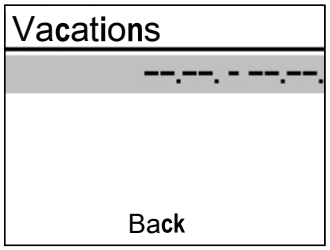

- ✳ Start the vacations setting.
  The first vacations setting is now selected. '--.-- - --.--' is displayed if no vacations (default setting) have been programmed.
- ↺ If applicable, select '--.-- - --.--'.

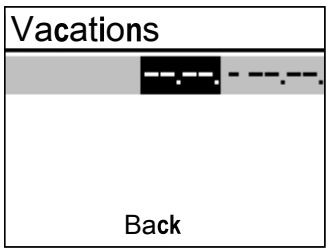

- ✳ Activate the editing mode for vacations.
  The start date can now be edited (inverted reading).
- ↺ Set the start date.
- ✳ Confirm the start date.
- ↺ Set the end date.

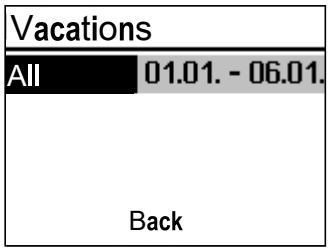

∗ Confirm the end date.
'All' is selected.
ʘ If the vacation period is only to be valid for one control circuit, select the required control circuit:
– Heating circuit HC1
– Heating circuit HC2
– Heating circuit HC3
– DHW heating
Only the control circuits that can be controlled by the selected system are available for selection.
The control circuits HC11, HC12 and HC13 are not available.
∗ Confirm.

i *Note*

An active vacation period is indicated on the display by the ⩲ icon.

Proceed in the same manner to program further vacation periods.

Deleting vacation periods:

ʘ Select the start date of the period you wish to delete.
∗ Confirm.
ʘ Select '--.-- - --.--'.
∗ Confirm.

The vacation period is deleted.

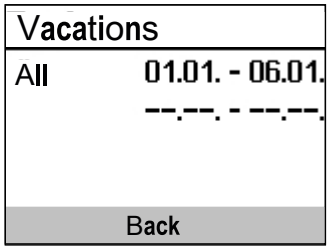

After programming all public holidays:

ʘ Select 'Back'.
∗ Exit the vacations setting.

Turn the rotary switch to 🖵 (operating level).

i *Note*

Vacations should be deleted by the end of the year so that they are not carried over into the following year.

8.3 Entering day and night set points

The day and night set points can be programmed for each control circuit and for the deactivation values based on the outdoor temperature.

i *Note*

When the four-point characteristic mode without room sensor and the optimizing mode or flash adaptation is used, it is not possible to adjust the set points for the room temperature.

The associated control circuit is immediately switched off in automatic or night mode when the outdoor temperature exceeds the limit 'OT deactivation value' (heating) or falls below the limit 'OT deactivation value' (cooling). The valve is closed and the pump is switched off after t = 2 x Valve transit time. Heating or cooling immediately starts again when the outdoor temperature falls below or exceeds the limit respectively (minus 0.5 °C hysteresis).

Switch position 🌡☼

Parameters	Default	Value range
HC1 room temperature	20.0 °C	0.0 to 40.0 °C
HC1 room temperature	20.0 °C	0.0 to 40.0 °C
HC2 room temperature	20.0 °C	0.0 to 40.0 °C
HC3 room temperature	20.0 °C	0.0 to 40.0 °C
HC11 room temperature	20.0 °C	0.0 to 40.0 °C
HC12 room temperature	20.0 °C	0.0 to 40.0 °C
HC13 room temperature	20.0 °C	0.0 to 40.0 °C
DHW temperature	60.0 °C	Min. to max. DHW temperature
HC1 OT deactivation value	22.0 °C	0.0 to 50.0 °C
HC2 OT deactivation value	22.0 °C	0.0 to 50.0 °C
HC3 OT deactivation value	22.0 °C	0.0 to 50.0 °C
HC11 OT deactivation value	22.0 °C	0.0 to 50.0 °C
HC12 OT deactivation value	22.0 °C	0.0 to 50.0 °C
HC13 OT deactivation value	22.0 °C	0.0 to 50.0 °C

Switch position 🌡☾

Parameters	Default	Value range
HC1 room temperature	15.0 °C	0.0 to 40.0 °C
HC1 room temperature	15.0 °C	0.0 to 40.0 °C
HC2 room temperature	15.0 °C	0.0 to 40.0 °C
HC3 room temperature	15.0 °C	0.0 to 40.0 °C
HC11 room temperature	15.0 °C	0.0 to 40.0 °C
HC12 room temperature	15.0 °C	0.0 to 40.0 °C
HC13 room temperature	15.0 °C	0.0 to 40.0 °C
DHW temperature	40.0 °C	Min. to max. DHW temperature
HC1 OT deactivation value	+15.0 °C	–50.0 to +50.0 °C
HC2 OT deactivation value	+15.0 °C	–50.0 to +50.0 °C
HC3 OT deactivation value	+15.0 °C	–50.0 to +50.0 °C
HC11 OT deactivation value	+15.0 °C	–50.0 to +50.0 °C
HC12 OT deactivation value	+15.0 °C	–50.0 to +50.0 °C
HC13 OT deactivation value	+15.0 °C	–50.0 to +50.0 °C

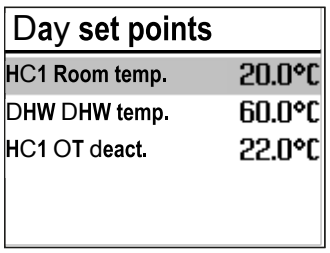

Turn the rotary switch to ☼ (day set point) or ☾ (night set point). The day and night set points appear on the display one after the other.
→ Only those day and night set points that can be controlled by the selected system are available for selection.

i *Note*

The deactivation values are located in a separate menu ('Deactivation values') for systems with three control circuits.

↻ Select the set point.

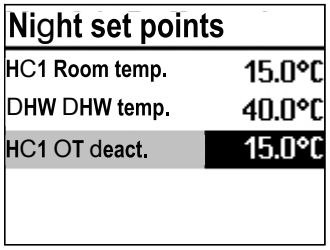

✳ Activate editing mode for the set point.
↻ Adjust the set point.
✳ Confirm setting.
Proceed in the same manner to adjust further set points.

After adjusting all the set points:
Turn the rotary switch to ▣ (operating level).

8.4 Reset to default settings

All parameters set over the rotary switch as well as parameters in the PA1, PA2, PA3, PA11, PA12 and PA13 parameter levels can be reset to their default settings. This does not apply to the maximum flow temperature and the return temperature limits in PA1 and PA2.

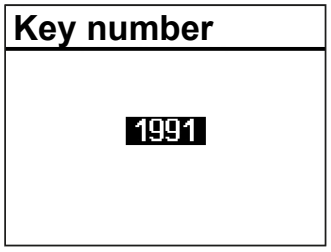

Turn the rotary switch to ⇳ (settings).
ᔕ Enter key number 1991.
∗ Confirm setting.
The default settings have been restored when the following icon appears on the controller display:



8.5 Information readings

Different kinds of information can read off the heating controller display during operation. The heating controller display usually shows the date, time and a current temperature when the rotary switch is switched to the 'Operating level' position (⌸).

Modbus TCP/IP communication

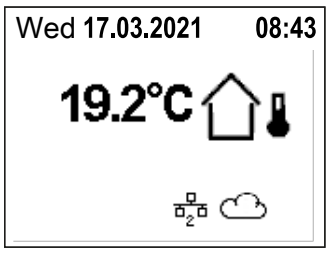

Modbus TCP/IP connections

Number of active Modbus TCP/IP connections

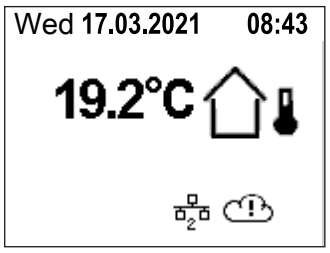

Status of connection to SAM DISTRICT ENERGY

Connection to SAM DISTRICT ENERGY active

Connection to SAM DISTRICT ENERGY failed

Outdoor-temperature-compensated control · Current temperature = outdoor temperature

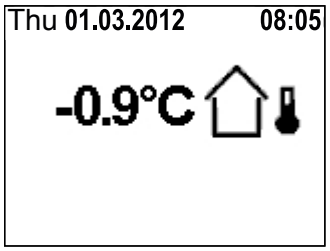

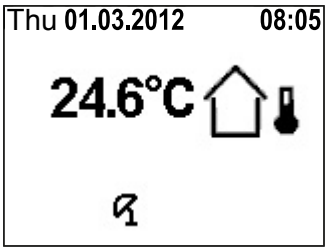

Deactivation depending on outdoor temperature active

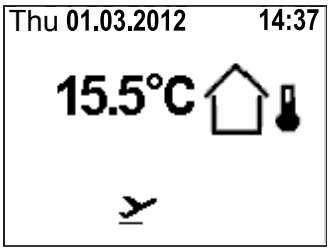

Vacation period active

Fixed set point control · Current temperature = Flow temperature

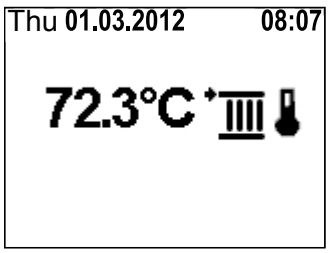

Further information can be displayed by turning the rotary pushbutton:

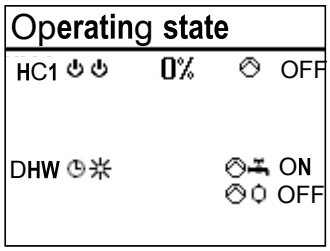

Operating state:
The following applies for heating circuits HC1, HC2, HC3, HC11, HC12 and HC13:



1 Heating circuit
2 Current operating mode
3 Valve ▲ OPEN/valve ▼ CLOSED
4 Current positioning value
5 Circulation pump (heating) ON/OFF

The following applies for DHW heating:

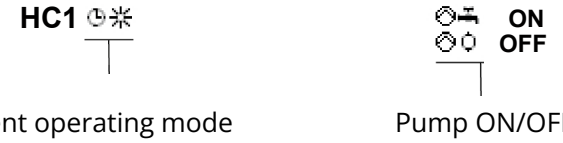

Storage tank charging pump
Circulation pump (DHW)
Solar circuit pump

See Chapter 8.1 for further information.

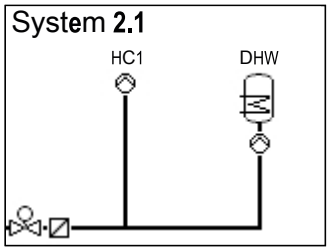

Selected system code number
See Chapter 16 for further information.

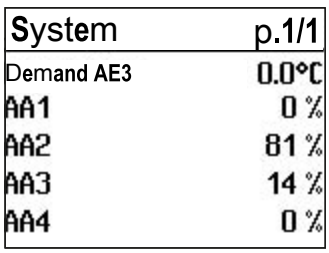

∗ Reading of analog output signals AA1 to AA4 as well as measured values for the entire system (e.g. measured values and limits of a flow rate or power limitation or the demand to be processed), if activated.

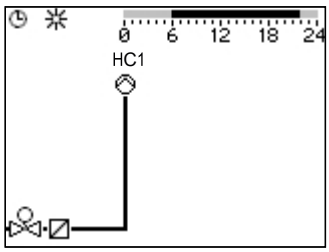

Times-of-use (depending on system code number)
- Heating circuit HC1
- Heating circuit HC2
- Heating circuit HC3
- Heating circuit HC11
- Heating circuit HC12
- Heating circuit HC13
- DHW heating

The day mode times are highlighted in black on the time chart. Night mode and deactivation times are highlighted in gray on the time chart.

∗ Measured values, set points and limits of the system section shown are displayed.

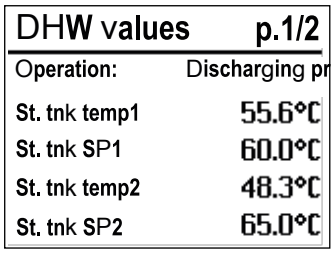

The 'DHW values' screen also includes information on the operating state of the DHW heating.
The following messages are generated:
- 'Standby'
- 'Monitoring'
- 'Circulation' (= circulation losses are compensated for)
- 'Demand'
- 'Charging'
- 'Lag time'
- 'Intermediate heating'
- 'Discharging protection'

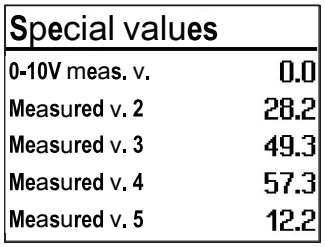

↻ Special values:
Measured values from additional sensor inputs (not relevant to the closed-loop control) or from the 0 to 10 V inputs are displayed.

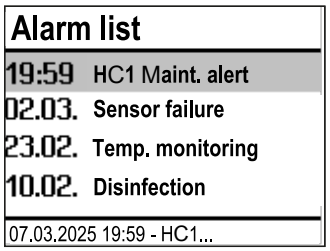

↻ Alarm list
The last four alarm entries are listed.
∗ Open the alarm list and select further alarm entries [↻]. Further information on an alarm (including time and date when it occurred) runs across the display.

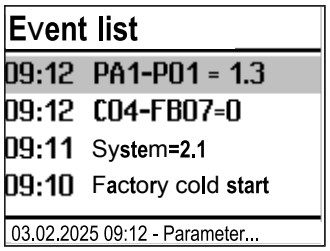

↻ Event list
The last four event entries are listed.
∗ Open the event list and select further event entries [↻].
Further information on an event (including time and date when it occurred) runs across the display.

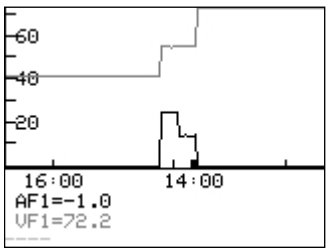

↻ Trend-Viewer
The standard graph shows the data measured by the outdoor sensor AF1 and flow sensor VF1 plotted over time.

Further information can be displayed by turning the rotary pushbutton:

Extended operating level

Information	
Modbus ID	5578
Serial number	65535
Software version	2.50
Hardware version	0.09

The following details on the controller version (device identification, serial number, software and hardware versions) and meter bus are displayed in the extended operating level.

Information	p.1/3
Modbus station	1
Logging memory	OFF
Solar operation	0 h
Flow rate 1	0
Special flags	3840

Turn the rotary switch to ⚙ (settings).
ʘ Enter key number 1999.
∗ Confirm key number.
Turn the rotary switch to 🖵 (operating level).
ʘ Select 'Information'.

Information	p.2/3
VF1-RüF1	--.-°C
Y1 avg mth bfr lst	10240
Y1 avg last month	0
Y1 avg this month	0
Binary inputs	□□□□□□□□ □□□□□□□□

The additional 'Meter' screen is displayed, which includes the connection status and further meter data for meters 1 to 3 when the meter bus is activated (see Chapter 16). When the flow rate and/or power limitation is activated, the respective measured values and limits are also displayed after confirming the system scheme.

Information	p.3/3
Reason for reset	0x00
Ethernet module v.	2.00
IP addr.	172.30.39.203
Subnet	255.255.0.0

i *Note*

The additional information is hidden when the key number 1999 is entered again.
The key number 1999 cannot be used to change the controller's configuration and parameter settings. A separate key number exists for configuration and parameterization (see Chapter 7).

8.5.1 Adapting the Trend-Viewer

The standard graph shows the data measured by the outdoor sensor AF1 and flow sensor VF1 plotted over time.

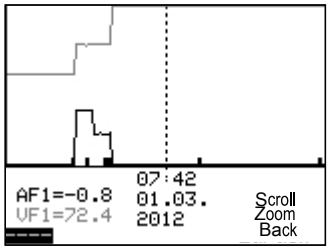

∗ Open the Trend-Viewer.
Adding measured values
ʘ Select **– – – –** on the display.
∗ Activate editing mode for sensor selection.
ʘ Select the sensor.
∗ Confirm.

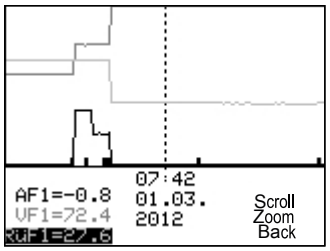

Deleting measured values

- Select the sensor whose measured values are no longer to be displayed.
- Activate editing mode for the sensor.
- Select **– – – –** on the display.
- Confirm deletion.

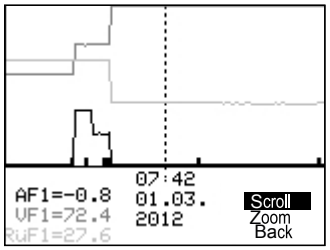

Shifting the time line

- Select 'Scroll'.
- Activate editing mode for the scroll function.

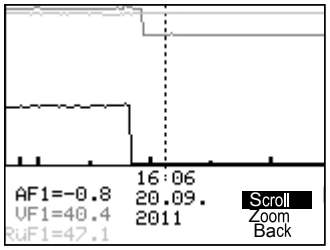

- Shift the time line.
- Confirm time display.

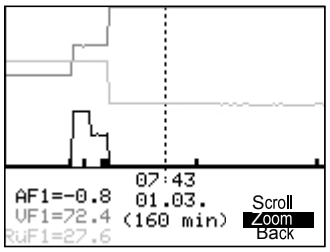

Zooming in/out

- Select 'Zoom'.
- Open zoom function.
- Zoom in or out.
- Confirm display.

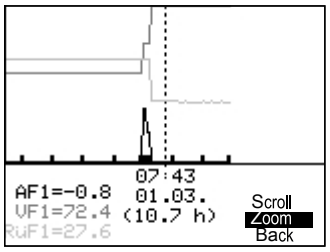

Closing the Trend-Viewer

- Select 'Back'.
- Close the Trend-Viewer.

8.6 Operating the heating controller in manual mode

All of the outputs for the heating controller are performed in manual mode.

NOTICE

System damage caused by frost in manual mode.

The frost protection function is deactivated in the manual mode.

⇨ *Do not run the heating during cold weather in the manual mode for long periods of time.*

Manually changing the positioning value/switching state

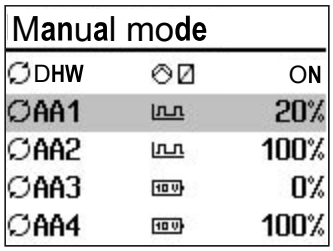

Turn the rotary switch to 🔧 (manual mode).
The outputs of the configured system are listed one after the other on the display.

- Select the output:
  - Positioning value
  - Circulation pump (heating)
  - Storage tank charging pump
  - Circulation pump (DHW)
  - Solar circuit pump
  - Analog 0 to 10 V signal
  - PWM signal
  - AA1 0 to 10 V signal
  - AA2 Analog output 2
  - AA3 Analog output 3
  - AA4 Analog output 4
- Activate editing mode for the output.
- Change the positioning value/switching state.
- Confirm the positioning value/switching state.
  The modified values remain active as long as the controller is in manual mode.

Turn the rotary switch to 🖵 (operating level). The manual mode is deactivated.

Note

The outputs of the heating controller are not affected by merely turning the rotary switch to 🔧 (manual mode). The outputs are only changed by entering or changing the positioning values or switching states.

9 Malfunctions

A malfunction is indicated by the blinking ⚠ icon on the display. Additionally, the display is illuminated for one second every 10 seconds.

The green illuminated tip of the rotary switch and display indicated that no errors or operational malfunctions are present. They change to red in the event of an error or malfunction. Press the rotary pushbutton to open the error level. As long as a malfunction exists, the error message remains visible on the display, even when it has not been opened by pressing the rotary pushbutton.

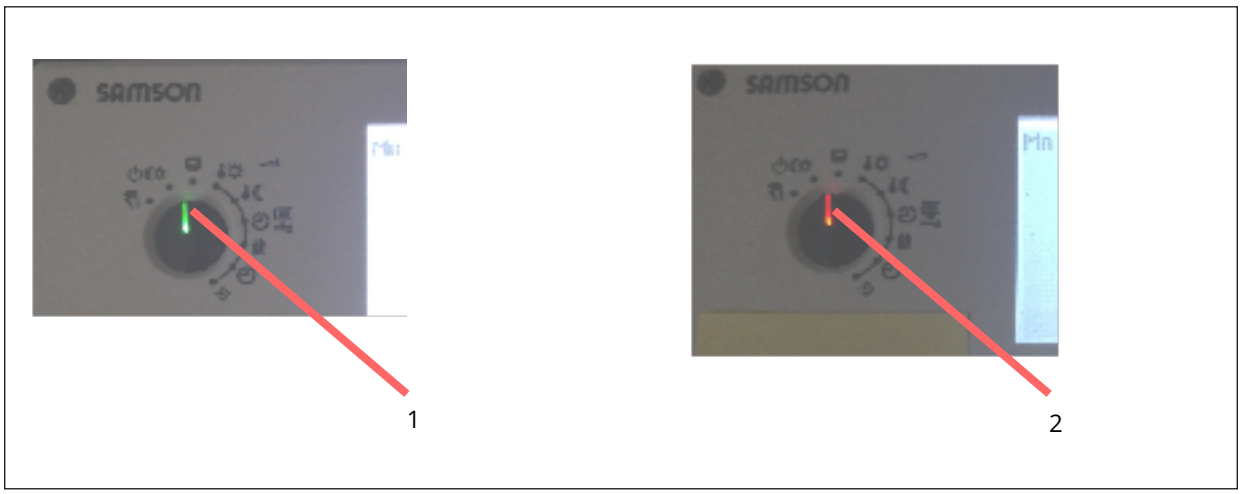

Fig. 11: *Error indicated at the rotary switch*

1 Green illuminated tip of the rotary switch
2 Red illuminated tip of the rotary switch

The error message is displayed in the error level as specified in the following list (see Chapter 9.1).

⚠ DANGER

Risk of fatal injury due to electric shock while performing electrical connection.

For wiring and connecting the heating controller, observe the relevant electrotechnical regulations of the country of use as well as the technical connection requirements of your local distribution system operator.

⇨ *Only allow properly trained and experienced personnel perform the electrical connection.*

❗ NOTICE

Risk of damage to the heating controller due to incorrectly performed work.

⇨ *Only properly trained personnel appropriately qualified to carry out such tasks must be allowed to perform corrective action.*

ℹ Note

After the system code number has been changed or after restarting the heating controller, any error messages are suppressed for approx. three minutes.

9.1 Error list

Sensor failure	=	Sensor failure (see Chapter 9.2)
TROVIS I/O failure	=	TROVIS I/O communication error
Disinfection	=	Disinfection temperature not reached (see Chapter 16.3.10)
Max. charging temp.	=	Max. charging temperature reached (see Chapter 16.3.2)
External error	=	Error message from device bus
Temp. monitoring	=	Temperature monitor alarm (see Chapter 9.3)
Unauthorized access error	=	Unauthorized access occurred (see Chapter 9.4)
Binary alarm	=	Error message of a binary input
Meter bus error	=	Meter bus communication error
Heat meter error	=	Heat meter error registered

i ***Note***

If error messages that can be confirmed are included in the list shown, you can decide whether you want to confirm them on exiting the error list.

9.2 Sensor failure

As described in the error list, sensor failures are indicated by the 'Sensor failure' error message in the error level. For detailed information, exit the error level and view the different temperature values in the operating level:

Each sensor icon displayed together with three dashes instead of the measured value indicates a defective sensor. The following list explains how the heating controller responds to the failure of the different sensors.

- **Outdoor sensor AF1/AF2:**
  In the event that the outdoor sensor fails, the controller uses a flow temperature set point of 50 °C or the 'Max. flow temperature' (PA1, 2,3 → P07 [1]) if 'Max. flow temperature' is lower than 50 °C. With the setting CO1, 2, 3 → F05 - 1 [2] (underfloor heating), the flow temperature set point is 30 °C in the event of a malfunction.
- **Flow sensor(s) in heating circuit(s):**
  In the event that the flow sensors in the heating circuits fail, the associated valve moves to 30 % travel. DHW heating which use such a sensor to measure the charging temperature is suspended.
  When the DHW circuit has two charging temperature sensors VF2 and VF4, the controller behaves as if VF4 sensor has not been configured in the event that it fails. As soon as the control of the charging temperature using the VF2 sensor or the DHW temperature becomes impossible, the associated valve is closed.
- **Return sensor RüF:**
  In the event that the return sensor fails, the controller continues operation without return temperature limitation.
- **Room sensor RF:**
  In the event that the room sensor fails, the heating controller uses the settings for operation without room sensor. For example, the controller switches from optimizing mode to night mode. The adaptation mode is canceled. The last determined heating characteristic remains unchanged.
- **Storage tank sensors SF1/SF2:**
  In the event that one of the two sensors fails, the storage tank is no longer charged (exception: solar system).
- **Solar circuit sensors SF, VF/RüF:**
  In the event that one of the two sensors fails, the storage tank is no longer charged by the solar system.

[1] When a connected I/O module is included, also PA11, 12, 13 → P07

[2] When a connected I/O module is included, also CO11, 12, 13 → F05 - 1

9.3 Temperature monitoring

When a system deviation greater than 10 °C persists in a control circuit for 30 minutes, the 'Temp. monitoring' error message is generated.

Function	Default	Configuration
Monitoring	0	CO5 → F19 - 1

9.4 Error status register

The error status register is used to indicate controller or system errors. The error messages which cause a change in the state of the configured fault alarm output (CO5 → F07 - 1) are highlighted in the following table (bold).

The function blocks in the CO8 configuration level allow single heating controller inputs that are not used to be added to the error status register as binary inputs.

Either a make or break contact at the binary input can be configured to indicate an error. The heating controller indicates 'Binary alarm' when at least one of the inputs configured in this way registers an error.

i *Note*

If free inputs are to issue binary signals to a building control station without affecting the error status register, activate the corresponding function block in the CO8 configuration level and select 'None' as the function block parameter.

Error message	Decimal value	
Sensor failure	1	1
TROVIS I/O failure	2	
Disinfection	4	
Max. charging temp.	8	
External error	16	
Temp. monitoring	32	32
Unauthorized access error	64	
Binary alarm	128	
Meter bus error	256	
Heat meter error	512	
		Total
Example: Value of error status register when a sensor fails and a temperature monitoring alarm =		33

10 Servicing

The work described in this chapter is to be performed only by personnel appropriately qualified to carry out such tasks.

10.1 Recommended inspection and testing

SAMSON recommends inspection and testing according to the following table:

Table 5: *Recommended inspection and testing*

Inspection and testing	Action to be taken in the event of a negative result
Check the markings, labels and nameplates on the device for their readability and completeness.	⇨ Immediately renew damaged, missing or incorrect nameplates or labels.
	⇨ Clean any inscriptions that are covered with dirt and are illegible.
Check the electric wiring.	⇨ Tighten any loose terminal screws (see Chapter 5). ⇨ Renew damaged wires.
Check whether the firmware is up to date.	⇨ Download the currently valid firmware at ▶ www.samsongroup.com > DOWNLOADS > Software & Drivers > Firmware and install it (see Chapter 10.2).
Compare the temperature values displayed at the heating controller with the actual temperatures at the point of measurement.	⇨ If the displayed and actual temperatures differ, calibrate the sensors (see Chapter 7).

Tip

The SAMSON NE53 newsletter keeps users up to date on any software or hardware revisions in accordance with NAMUR Recommendation NE 53. Subscribe to the NE53 newsletter at ▶ www.samsongroup.com > SERVICE > NE53 newsletter.

10.2 Firmware update

10.2.1 Update over Bluetooth®

Requirements

– Latest version of the **TROVIS 55 Pro** app for Android/iOS is installed (see Chapter 16.5.6)
– Smartphone

Fig. 12: *QR code · Android*

Fig. 13: *QR code · iOS*

Note

Bluetooth® must be activated in the system settings of the smartphone and all permissions granted.

The update process takes around seven minutes.

NOTICE

Network connections are interrupted.

All network interfaces (SAM DISTRICT ENERGY, Modbus TCP) are locked while the Bluetooth® service interface is active. Any active connections are terminated. After deactivating the Bluetooth® interface, the network interfaces are available again after approx. 20 to 30 seconds.

How to proceed:

1. Download the latest version of the tool to install firmware update files (boot manager) and the currently valid firmware file at ▶ www.samsongroup.com > DOWNLOADS > Software & Drivers > Firmware.
2. Press and hold the rotary pushbutton on the controller to activate Bluetooth®.
3. Activate Bluetooth® on the smartphone.
4. Start the **TROVIS 55 Pro** app.
5. Run the controller update in the app.

Go to the following link to find more information and videos on how to update controllers:

▶ https://www.samsongroup.com/en/products/automation-systems/5578-e/#tab-2

10.2.2 Update using a computer

Requirements

– Computer with Microsoft Windows® operating system
– The latest version of the tool to install firmware update files (boot manager) is installed (download at ▶ www.samsongroup.com > DOWNLOADS > Software & Drivers > Firmware)
– Patch cable
– Rights to change network parameters

Procedure

1. Download the currently valid firmware at ▶ www.samsongroup.com > DOWNLOADS > Software & Drivers > Firmware.
2. Follow the basic steps to configure functions.

The data to be checked and entered are highlighted in the description below.

⇨ Check the controller model written on the nameplate and displayed in the extended operating level of the controller (see Chapter 8).

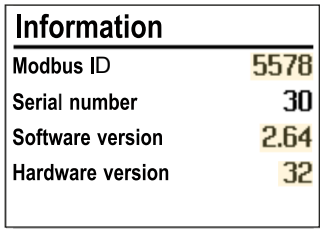

Controller settings

Perform the following settings in the controller to download the firmware over Ethernet:

⇨ Activate the Modbus TCP (Port 502): **CO6 → F27 - 1**
⇨ Deactivate the encryption: **CO6 → F28 - 0**
⇨ Manually enter the IP address: **CO6 → F25 - 1**

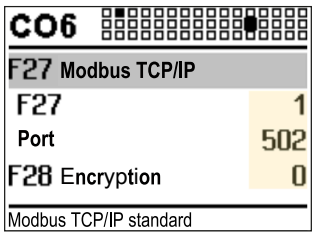

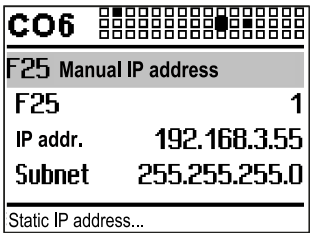

Adopting the controller settings

Before starting the firmware update, note down the Modbus station address and IP address used by the controller.

⇨ This information can be found in the extended operating level of the controller. Enter these addresses into the corresponding input fields in the boot manager.

⇨ Make sure that the network settings are suitable for the computer used.

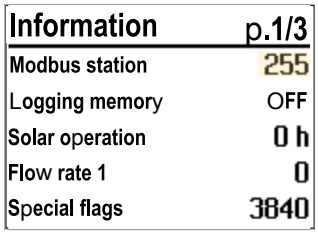

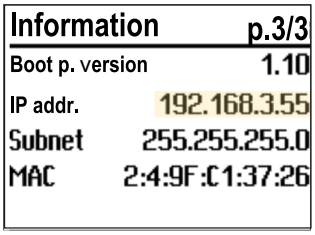

Computer settings

i *Note*

Windows® admin rights are required to perform the following settings.

⇨ *Select the corresponding network interface in the Windows Control Panel > Network and Internet > Change Adapter Settings. Click Properties and select 'Internet Protocol Version 4'.*

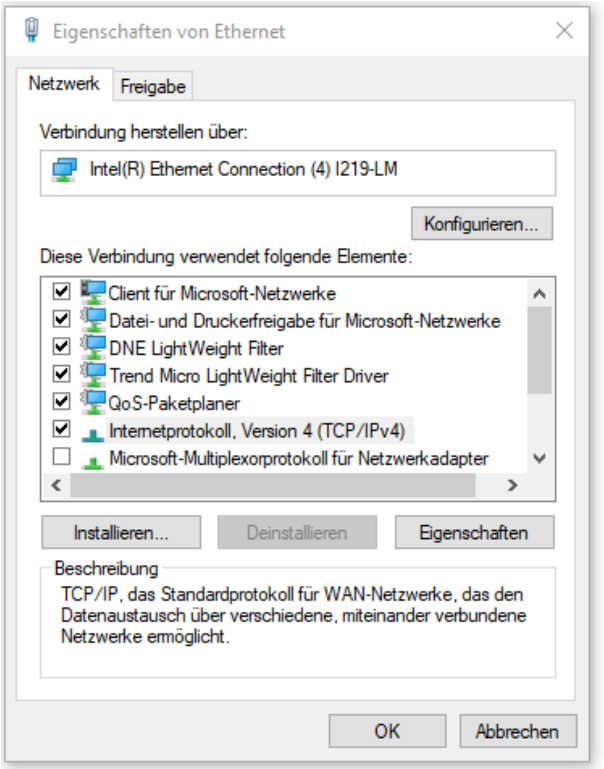

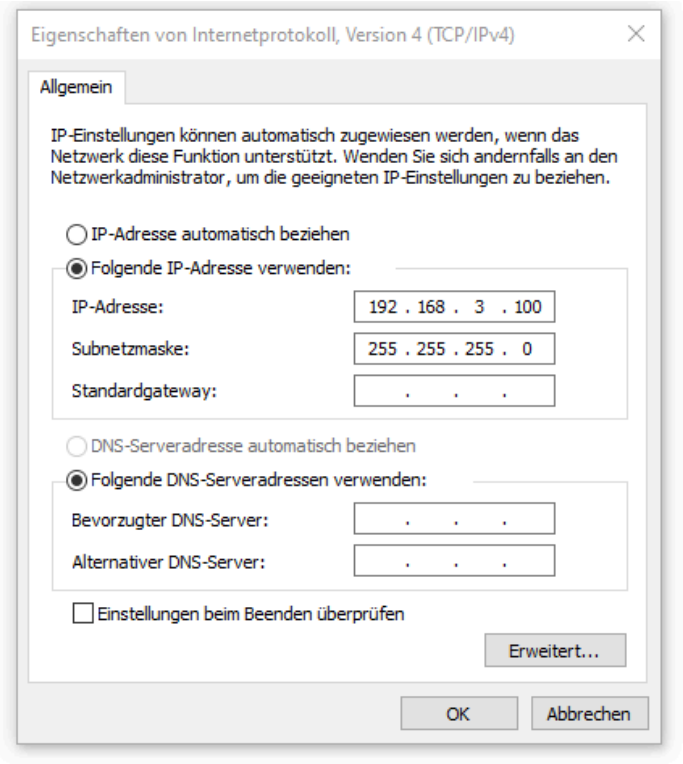

In the example shown, the computer must have an address in the range 192.168.3.xxx. 192.168.3.55 is assigned as the address for the controller in this case. Therefore, this address cannot be used for the computer. The subnet mask must also be set to 255.255.255.0 in the computer. A gateway does not need to be entered.

⇨ Use the patch cable to connect the computer to the controller.

Checking the boot manager version

⇨ Make sure that the latest version of the boot manager (V1.62 or higher) is installed.

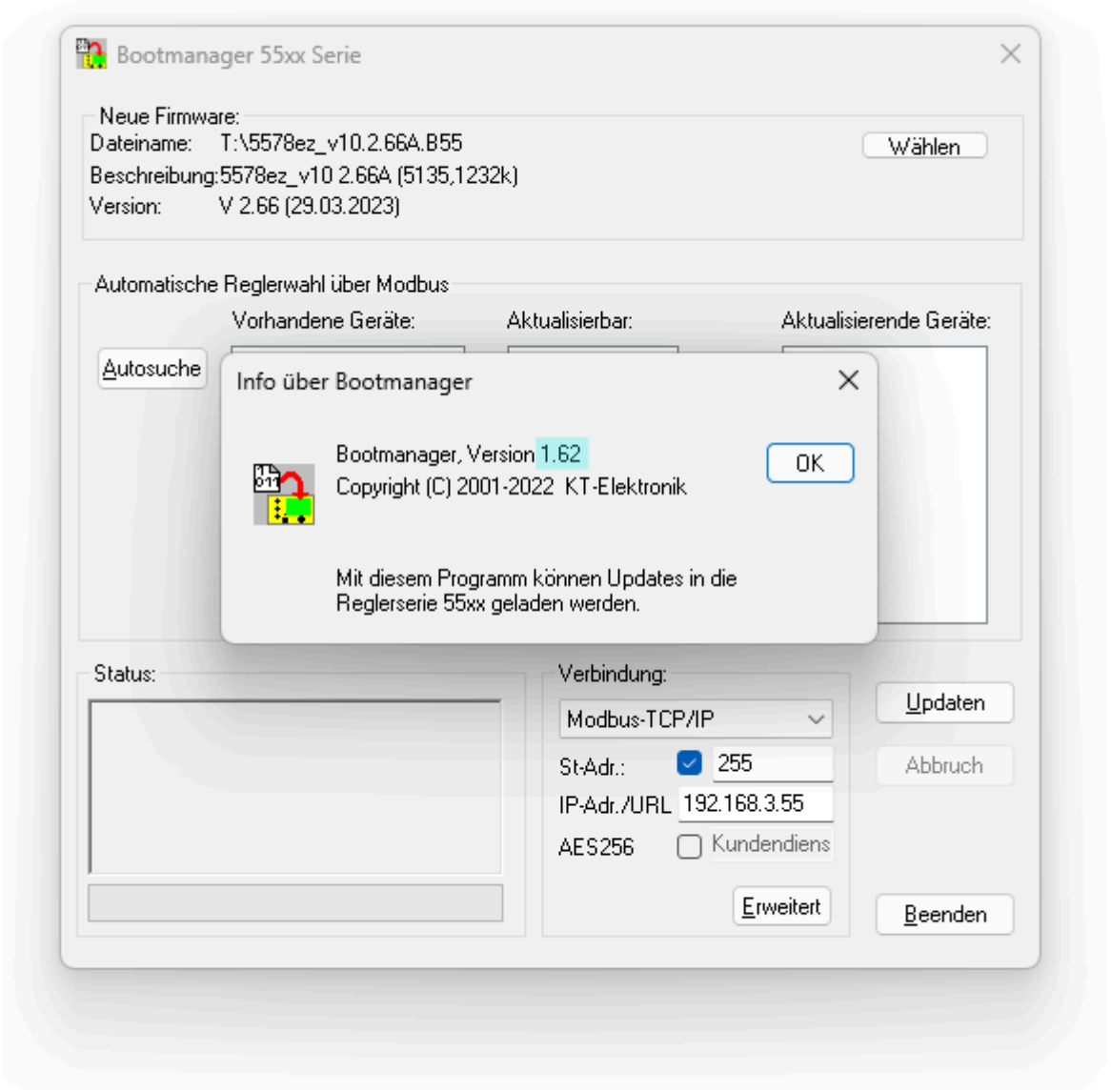

Boot manager settings

The following settings must be performed in the boot manager to download the firmware over Ethernet:

In the 'Verbindung' (connection) field:

- Select 'Modbus-TCP/IP'.
- Check the 'St-Adr.' check box and enter the Modbus station address of the controller.

⇨ Enter the same information as in the controller.

- Controller's IP address

⇨ Enter the same information as in the controller.

- Uncheck the 'AES256' encryption checkbox.

Click [Erweitert] (advanced):

⇨ Check TCP port and, if necessary, change it to the controller setting.

⇨ Check the 'Hintergrundübertragung' (background transfer) checkbox.

i Note

An activated customized key number in the controller must be confirmed in the [Erweitert] (advanced) settings by checking the 'Individuelle Schlüsselzahl' (customized key number) checkbox.

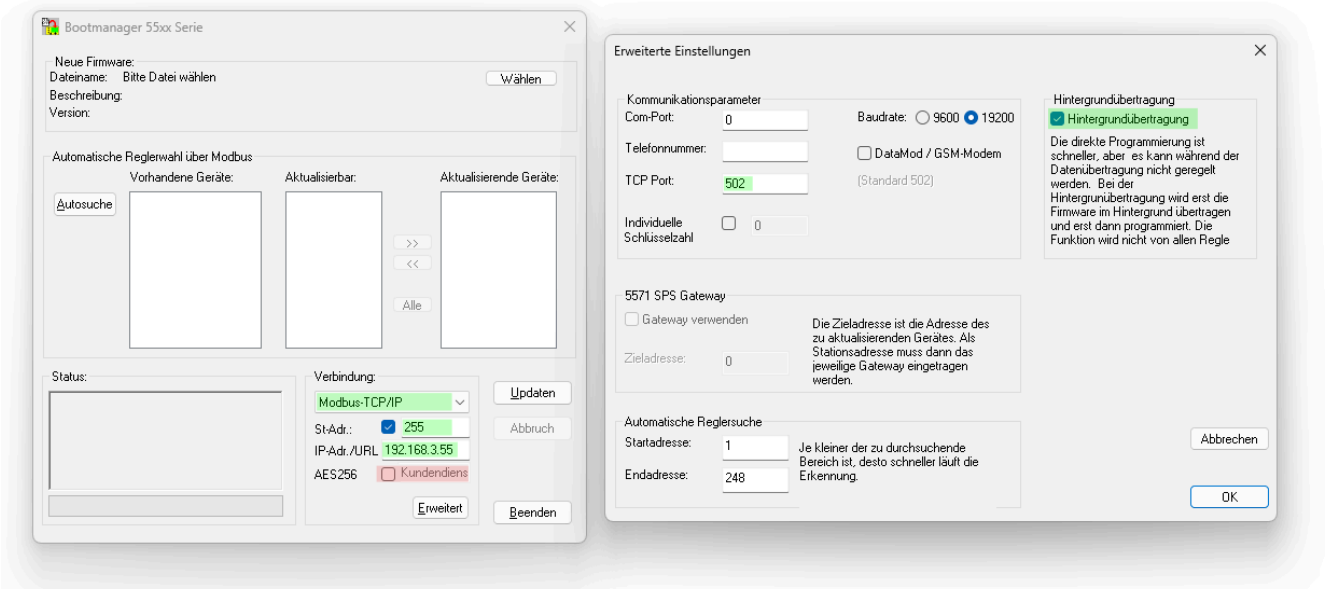

Performing the firmware update

⇨ Select the firmware file (file type *.b55).

⇨ Switch on the controller.

⇨ Do not operate the controller while the update process is in progress.

⇨ Do not switch off the controller while the update process is in progress.

⇨ Start the update in the boot manager.

⇨ While the update process is running, monitor the reading in the 'Status' window and the progress bar.

⇨ After data transmission has finished, wait until the controller restarts and the home screen appears.

⇨ Go to the extended operating level of the controller and check the software version to ensure that the firmware update was successful.

⇨ If the update was not completed properly, check the data settings of the controller and boot manager following these instructions. Restart the firmware update.

⇨ Contact SAMSON's After-Sales Service if the firmware update cannot be completed successfully.

For this purpose, submit the following information:

- Any error messages that appear
- All the data settings performed according to these instructions
- All the data settings made in the boot manager

11 Decommissioning

The work described in this chapter is to be performed only by personnel appropriately qualified to carry out such tasks.

⚠ DANGER

Risk of fatal injury due to electric shock.

⇨ *Before disconnecting live wires at the heating controller, switch off the supply voltage and protect it against unintentional reconnection.*

To put the heating controller out of operation, the heating controller must be disconnected from the voltage supply.

⇨ When the heating controller is connected to a control station, log off the heating controller from the control station and disconnect the communication cable.

⇨ When the heating controller is connected to TROVIS-VIEW, remove the connecting cable from the RJ-45 port.

⇨ Disconnect the supply voltage and protect it against unintentional reconnection.

⇨ Open the controller housing. To do so, unscrew the top left and right screws on the front of the controller.

⇨ Disconnect the wires from the terminals.

⇨ Pull the wires out of the cable ducts.

12 Removal

The work described in this chapter is to be performed only by personnel appropriately qualified to carry out such tasks.

Panel mounting

1. Put the heating controller out of operation (see Chapter 11).
2. Unscrew the top left and bottom right screws to unfasten the controller housing from the panel.

Wall mounting

1. Put the heating controller out of operation (see Chapter 11).
2. Unscrew the fastening screws and remove the back of the housing from the wall.

Rail mounting

1. Put the heating controller out of operation (see Chapter 11).
2. Unscrew the top left and bottom right screws to unfasten the controller housing from the top-hat rail.

13 Repair

A defective heating controller must be repaired or replaced.

NOTICE

Risk of damage to the heating controller due to incorrect service or repair work.

⇨ *Do not perform any repair work on your own.*

⇨ *Contact SAMSON's After-sales Service for service and repair work.*

13.1 Returning devices to SAMSON

Defective heating controllers can be returned to SAMSON for repair. Proceed as follows to return devices to SAMSON:

1. Put the heating controller out of operation (see Chapter 11).
2. Remove the heating controller (see Chapter 12).
3. Proceed as described on the Returning goods page of our website (▶ www.samsongroup.com > Service > After-sales Service > Returning goods).

14 Disposal



SAMSON is a producer registered in Europe, agency in charge
▶ www.samsongroup.com > About SAMSON > Environment, Social & Governance > Material Compliance > Waste electrical and electronic equipment (WEEE)
WEEE reg. no.: DE 62194439

Information on substances listed as substances of very high concern (SVHC) on the candidate list of the REACH regulation can be found in the document “Additional Information on Your Inquiry/Order”, which is added to the order documents, if applicable. This document includes the SCIP number assigned to the devices concerned. This number can be entered into the database on the European Chemicals Agency (ECHA) website (▶ https://www.echa.europa.eu/scip-database) to find out more information on the SVHC contained in the device.

Note

SAMSON can provide you with a recycling passport on request. Simply e-mail us at aftersalesservice@samsongroup.com giving details of your company address.

Tip

On request, SAMSON can appoint a service provider to dismantle and recycle the product as part of a distributor take-back scheme.

⇨ Observe local, national and international refuse regulations.

⇨ Do not dispose of components, lubricants and hazardous substances together with your other household waste.

15 Certificates

The following certificate is shown on the next page:

– EU declaration of conformity

The certificate shown was up to date at the time of publishing. The latest certificate can be found on our website at:

▶ www.samsongroup.com > Products > Automation Systems > 5578-E

EU Konformitätserklärung / EU Declaration of Conformity / Déclaration UE de conformité

Die alleinige Verantwortung für die Ausstellung dieser Konformitätserklärung trägt der Hersteller/
This declaration of conformity is issued under the sole responsibility of the manufacturer/
La présente déclaration de conformité est établie sous la seule responsabilité du fabricant.

Für das folgende Produkt / For the following product / Nous certifions que le produit

Heizungs- und Fernheizungsregler / Heating and District Heating Controller / Régulateur de chauffage et de chauffage à distance
Typ/Type/Type TROVIS 5578-E

wird die Konformität mit den einschlägigen Harmonisierungsrechtsvorschriften der Union bestätigt / the conformity with the relevant Union harmonisation legislation is declared with/ est conforme à la législation d'harmonisation de l'Union applicable selon les normes:

EMC 2014/30/EU	EN 61000-6-1:2007, EN 61000-6-3:2007 +A1:2011, EN 61000-6-4:2007+A1:2011
LVD 2014/35/EU	EN 60730-1:2016, EN 50344:2001
RoHS 2011/65/EU	EN 50581:2012

Hersteller / Manufacturer / Fabricant:

SAMSON AKTIENGESELLSCHAFT
Weismüllerstraße 3
D-60314 Frankfurt am Main
Deutschland/Germany/Allemagne

Frankfurt / Francfort, 2020-07-29

Im Namen des Herstellers/ On behalf of the Manufacturer/ Au nom du fabricant.

i.V. G. Nahler

Dipl.-Ing. Gert Nahler
Zentralabteilungsleiter/Head of Department/Chef du département
Entwicklung Automation und Integrationstechnologien/
Development Automation and Integration Technologies

i.V. S. Schäfer

Dipl.-Ing. Silke Bianca Schäfer
Total Quality Management/
Management par la qualité totale

ce_5578-e_de_en_fra_rev08.pdf

16 Appendix A (configuration instructions)

This Appendix contains information on the configuration of the TROVIS 5578-E Heating and District Heating Controller.

Note

Experimental functions are marked by ✓. SAMSON has intentionally made them available.

However, the use of such functions may lead to unforeseen malfunctions or failure. Any functions and parameters marked by ✓ are not adopted as standard until SAMSON can rule out malfunctions or failure caused by them. You are welcome to report any errors that you discover to SAMSON's After-sales Service by sending an e-mail to aftersalesservice@samsongroup.com.

16.1 Systems

Different hydraulic systems are available. The system images on the display show the structure of the hydraulic system.

Boiler plants

Single-stage boiler systems can be configured to include any system whose heating circuits and DHW circuit include just one heat exchanger.

This applies to the following systems:

1.0-1, 1.5-1, 1.6-1, 1.6-2, 1.7-1, 1.8-1, 1.8-2, 1.9, 2.x, 3.x, 4.x, 5.x, 6.0, 7.x, 8.x, 9.x, 11.1-3, 14.x, 15.x, 16.x and 17.x

The boiler can be controlled by an on/off output (CO1 → F12 - 0).

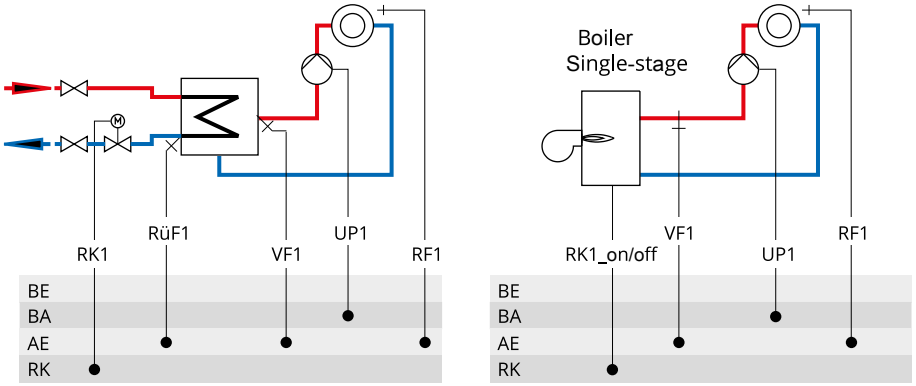

Fig. 14: *Configuration of a boiler system*

System 1.0-1

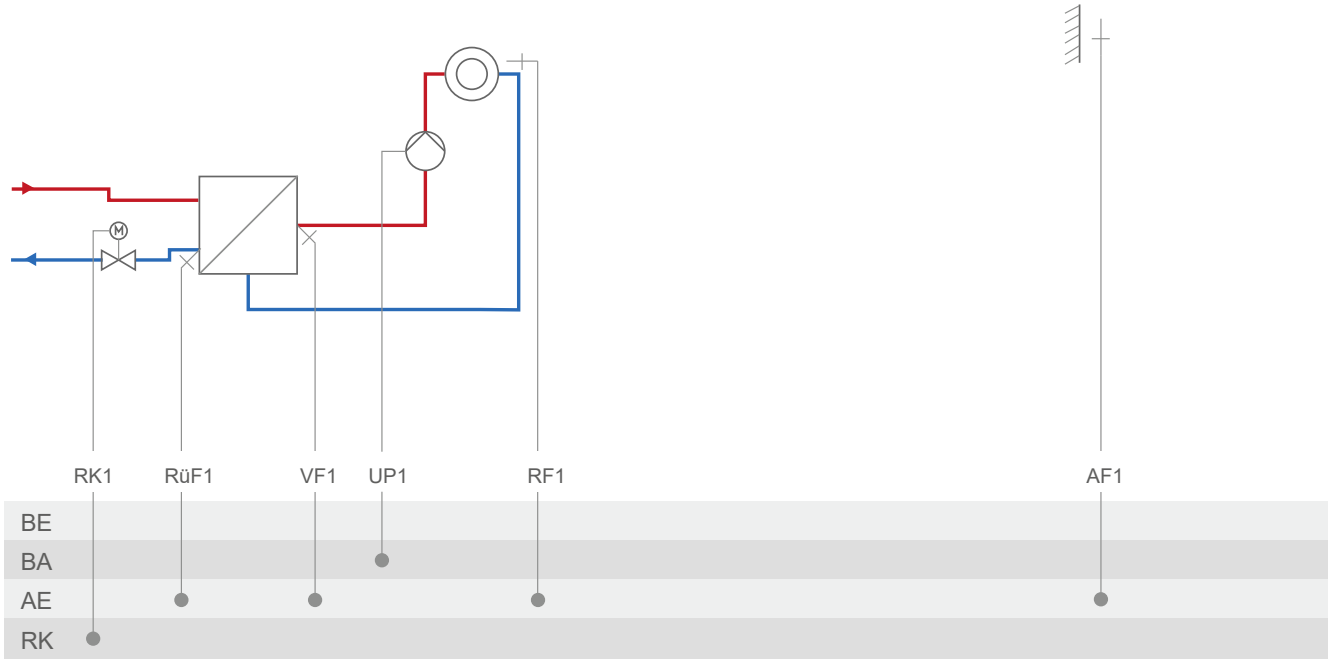

System	1.0-1
	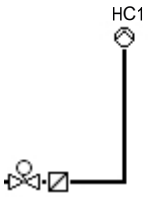
Default setting	
CO1 → F01	- 0 (without RF1)
CO1 → F02	- 1 (with AF1)
CO1 → F03	- 1 (with RüF1)
CO5 → F07	- 0 (without error message at terminal 43)
CO5 → F34, F35, F36, F37	Function AA1, AA2, AA3, AA4: – Control signal Y1 (RK1) – Differential temperature control When CO1 → F23 - 1 – External demand When CO1 → F18 - 1 – Outdoor temperature When CO5 → F23 - 1, Direction 'Output'

System 1.0-2

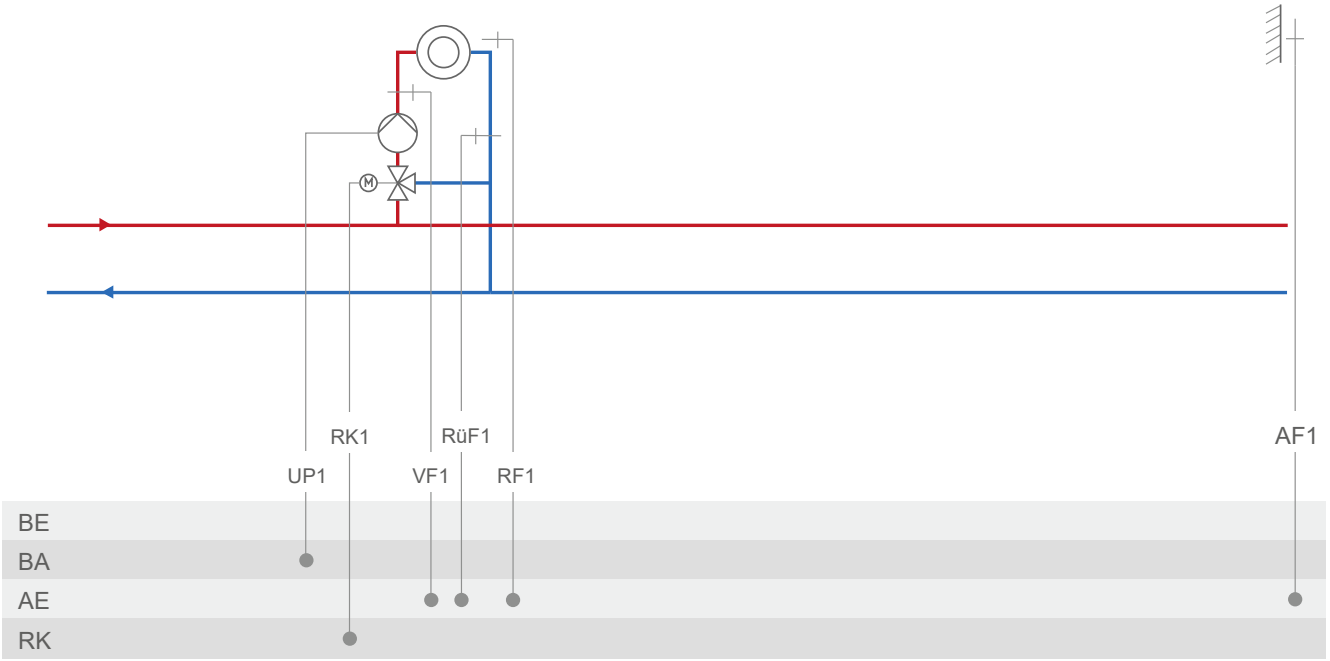

System	1.0-2
	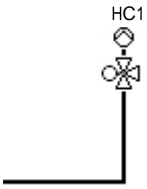
Default setting	
CO1 → F01	- 0 (without RF1)
CO1 → F02	- 1 (with AF1)
CO1 → F03	- 1 (with RüF1)
CO5 → F07	- 0 (without error message at terminal 43)
CO5 → F34, F35, F36, F37	Function AA1, AA2, AA3, AA4: – Control signal Y1 (RK1) – Differential temperature control When CO1 → F23 - 1 – External demand When CO1 → F18 - 1 – Outdoor temperature When CO5 → F23 - 1, Direction 'Output'

System 1.1-1

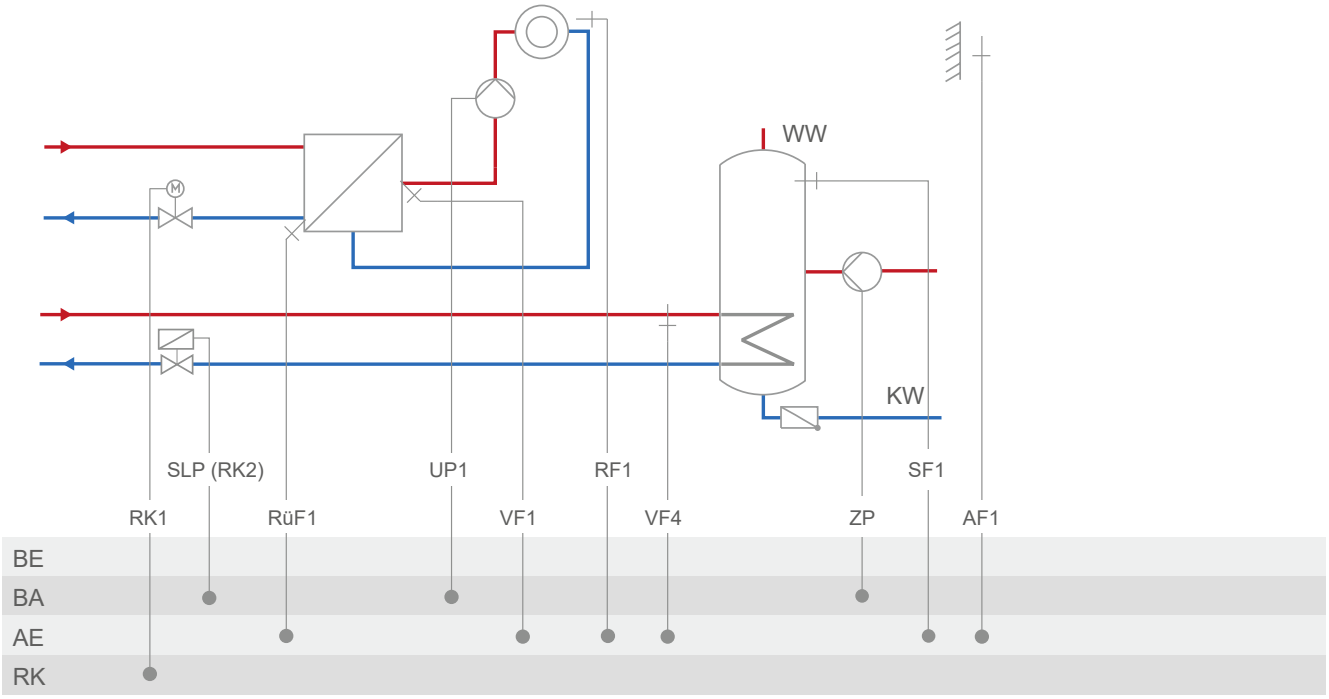

System	1.1-1
	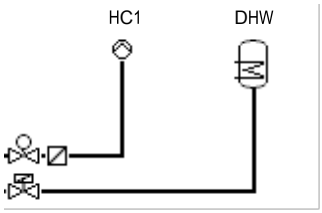
Default setting	
CO1 → F01	- 0 (without RF1)
CO1 → F02	- 1 (with AF1)
CO1 → F03	- 0 (without RüF1)
CO4 → F01	- 1 (with SF1)
CO4 → F02	- 0 (without SF2)
CO4 → F05	- 0 (without VF4)
CO5 → F07	- 0 (without error message at terminal 43)
CO5 → F34, F35, F36, F37	Function AA1, AA2, AA3, AA4: – Control signal Y1 (RK1) – External demand — When CO1 → F18 - 1 – ZP speed — When CO4 → F25 - 1 – Outdoor temperature — When CO5 → F23 - 1, Direction 'Output'

System 1.1-2

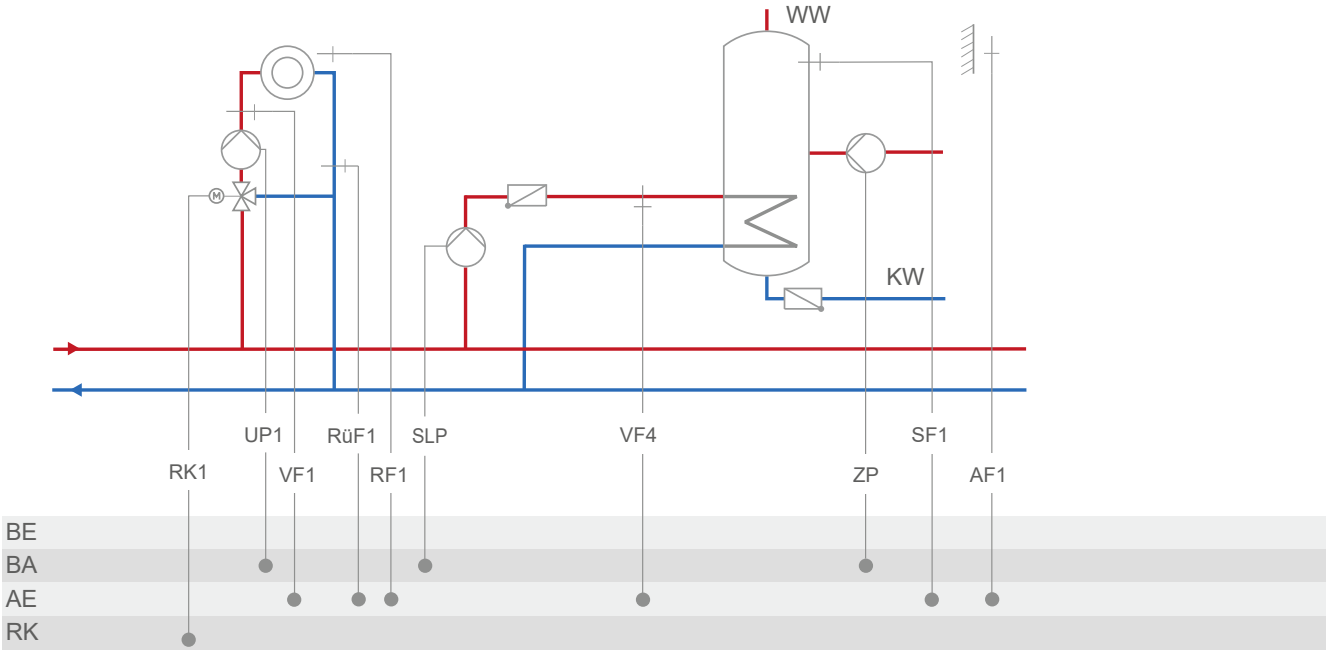

System	1.1-2
	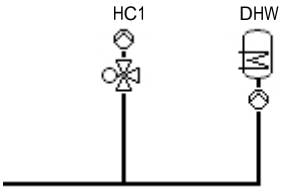
Default setting	
CO1 → F01	- 0 (without RF1)
CO1 → F02	- 1 (with AF1)
CO1 → F03	- 0 (without RüF1)
CO4 → F01	- 1 (with SF1)
CO4 → F02	- 0 (without SF2)
CO4 → F05	- 0 (without VF4)
CO5 → F07	- 0 (without error message at terminal 43)
CO5 → F34, F35, F36, F37	Function AA1, AA2, AA3, AA4: – Control signal Y1 (RK1) – External demand — When CO1 → F18 - 1 – SLP speed — When CO4 → F21 - 1 – ZP speed — When CO4 → F25 - 1 – Outdoor temperature — When CO5 → F23 - 1, Direction 'Output'

System 1.2

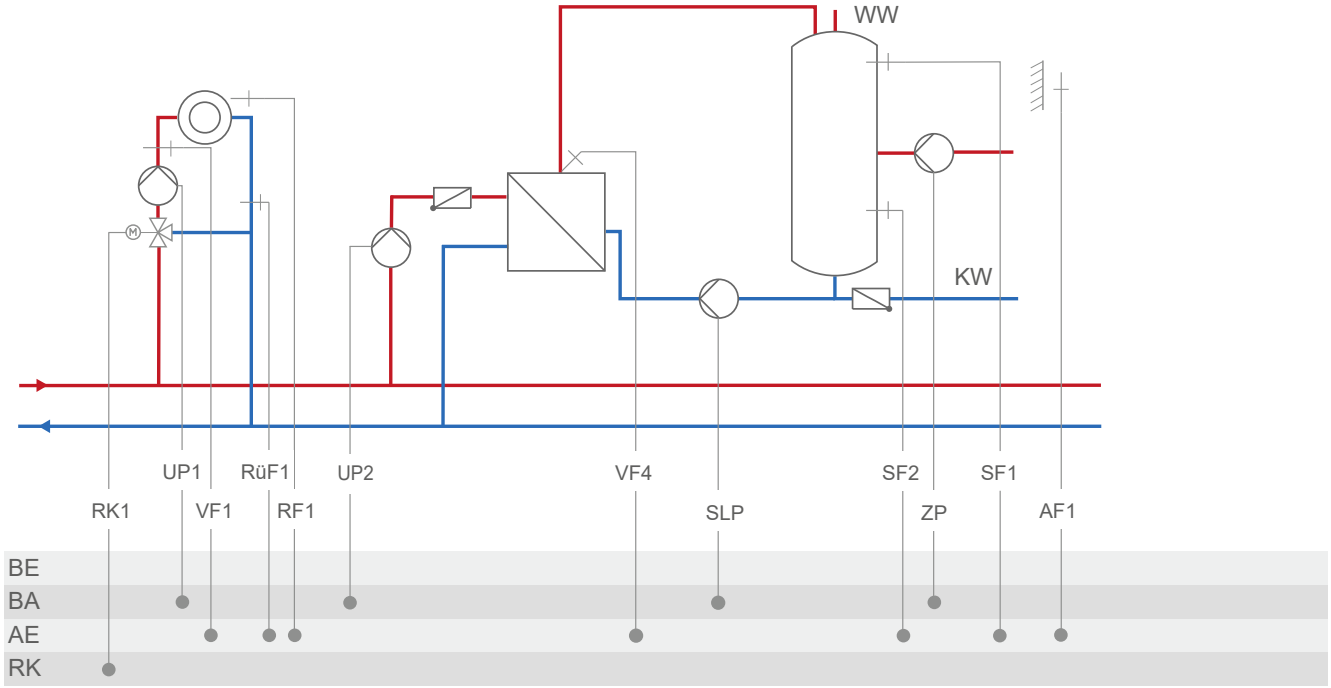

System	1.2
	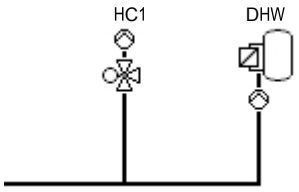
Default setting	
CO1 → F01	- 0 (without RF1)
CO1 → F02	- 1 (with AF1)
CO1 → F03	- 0 (without RüF1)
CO4 → F01	- 1 (with SF1)
CO4 → F02	- 1 (with SF2)
CO4 → F05	- 0 (without VF4)
CO5 → F07	- 0 (without error message at terminal 43)
CO5 → F34, F35, F36, F37	Function AA1, AA2, AA3, AA4: – Control signal Y1 (RK1) – External demand — When CO1 → F18 - 1 – SLP speed — When CO4 → F21 - 1 – ZP speed — When CO4 → F25 - 1 – Outdoor temperature — When CO5 → F23 - 1 Direction 'Output'

System 1.3-1

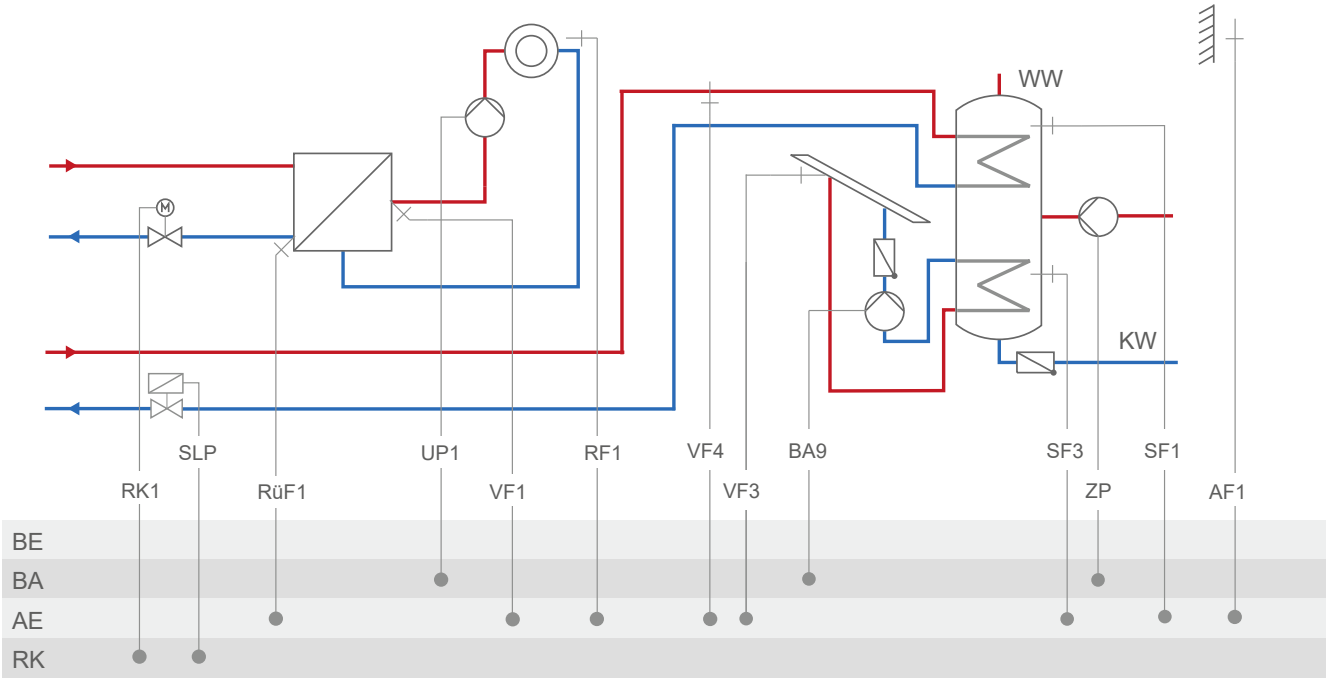

System	1.3-1
	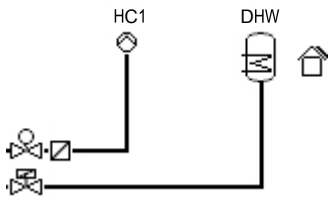
Default setting	
CO1 → F01	- 0 (without RF1)
CO1 → F02	- 1 (with AF1)
CO1 → F03	- 0 (without RüF1)
CO4 → F01	- 1 (with SF1)
CO4 → F02	- 0 (without SF2)
CO4 → F05	- 0 (without VF4)
CO5 → F07	- 0 (without error message at terminal 43)
CO5 → F34, F35, F36, F37	Function AA1, AA2, AA3, AA4: – Control signal Y1 (RK1) – External demand — When CO1 → F18 - 1 – SLP speed — When CO4 → F21 - 1 – ZP speed — When CO4 → F25 - 1 – Outdoor temperature — When CO5 → F23 - 1 Direction 'Output'

System 1.3-2

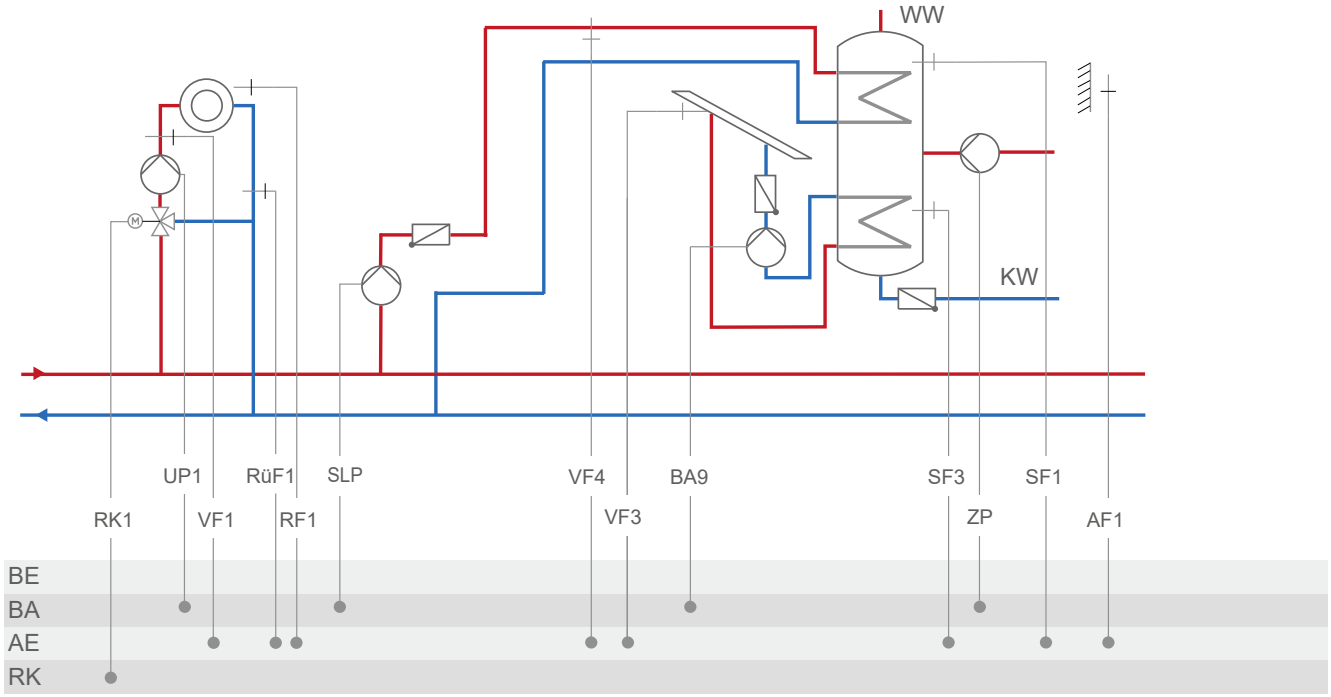

System	1.3-2
	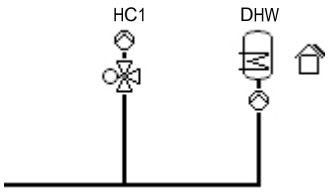
Default setting	
CO1 → F01	- 0 (without RF1)
CO1 → F02	- 1 (with AF1)
CO1 → F03	- 0 (without RüF1)
CO4 → F01	- 1 (with SF1)
CO4 → F02	- 0 (without SF2)
CO4 → F05	- 0 (without VF4)
CO5 → F07	- 0 (without error message at terminal 43)
CO5 → F34, F35, F36, F37	Function AA1, AA2, AA3, AA4: – Control signal Y1 (RK1) – External demand — When CO1 → F18 - 1 – SLP speed — When CO4 → F21 - 1 – ZP speed — When CO4 → F25 - 1 – Outdoor temperature — When CO5 → F23 - 1 Direction 'Output'

System 1.4

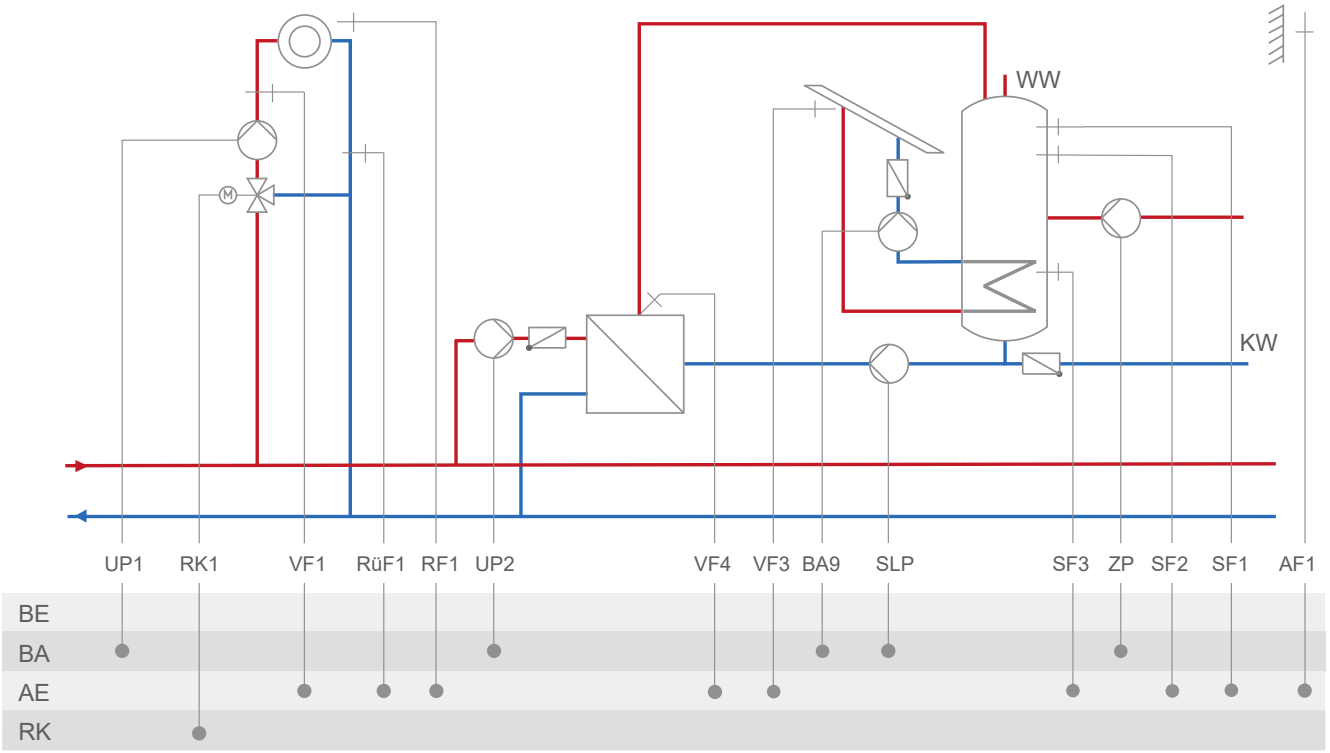

System	1.4
	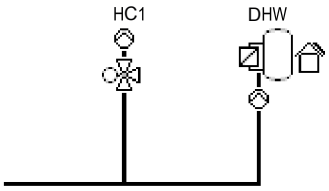
Default setting	
CO1 → F01	- 0 (without RF1)
CO1 → F02	- 1 (with AF1)
CO1 → F03	- 0 (without RüF1)
CO4 → F01	- 1 (with SF1)
CO4 → F02	- 0 (without SF2)
CO4 → F05	- 0 (without VF4)
CO5 → F07	- 0 (without error message at terminal 43)
CO5 → F34, F35, F36, F37	Function AA1, AA2, AA3, AA4: – Control signal Y1 (RK1) – External demand — When CO1 → F18 - 1 – SLP speed — When CO4 → F21 - 1 – ZP speed — When CO4 → F25 - 1 – Outdoor temperature — When CO5 → F23 - 1 Direction 'Output'

System 1.5-1

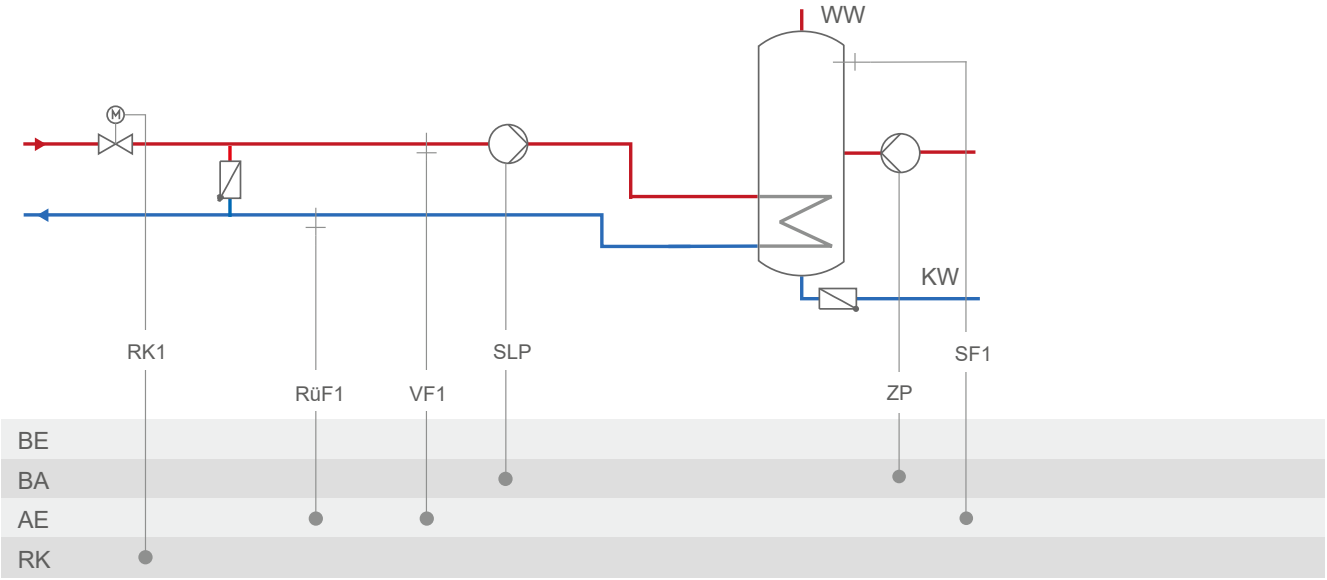

System	1.5-1
	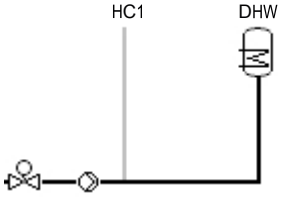
Default setting	
CO1 → F03	- 1 (with RüF1)
CO4 → F01	- 1 (with SF1)
CO4 → F02	- 0 (without SF2)
CO5 → F07	- 0 (without error message at terminal 43)
CO5 → F34, F35, F36, F37	Function AA1, AA2, AA3, AA4: – Control signal Y1 (RK1) – External demand — When CO1 → F18 - 1 – SLP speed — When CO4 → F21 - 1 – ZP speed — When CO4 → F25 - 1

System 1.5-2

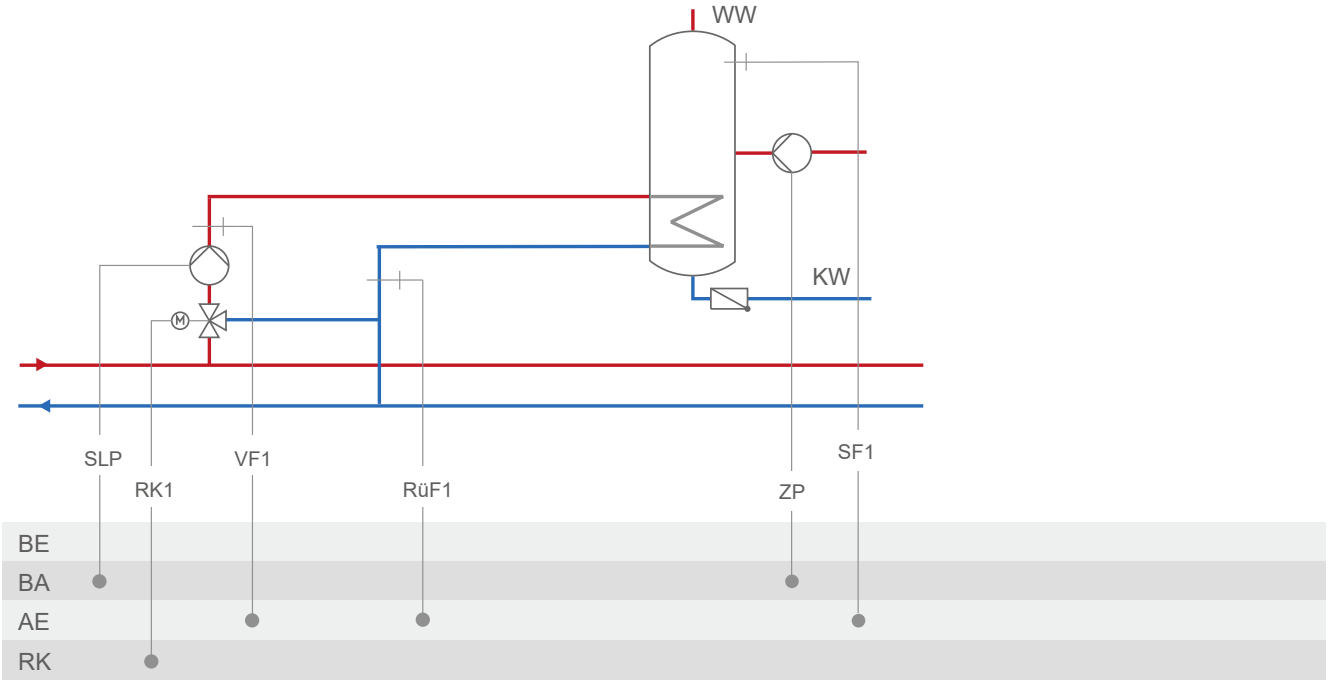

System	1.5-2
	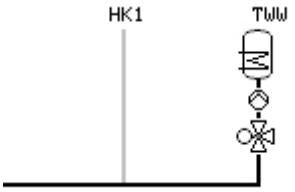
Default setting	
CO1 → F03	- 1 (with RüF1)
CO4 → F01	- 1 (with SF1)
CO4 → F02	- 0 (without SF2)
CO5 → F07	- 0 (without error message at terminal 43)
CO5 → F34, F35, F36, F37	Function AA1, AA2, AA3, AA4: – Control signal Y1 (RK1) – External demand — When CO1 → F18 - 1 – SLP speed — When CO4 → F21 - 1 – ZP speed — When CO4 → F25 - 1

System 1.6-1

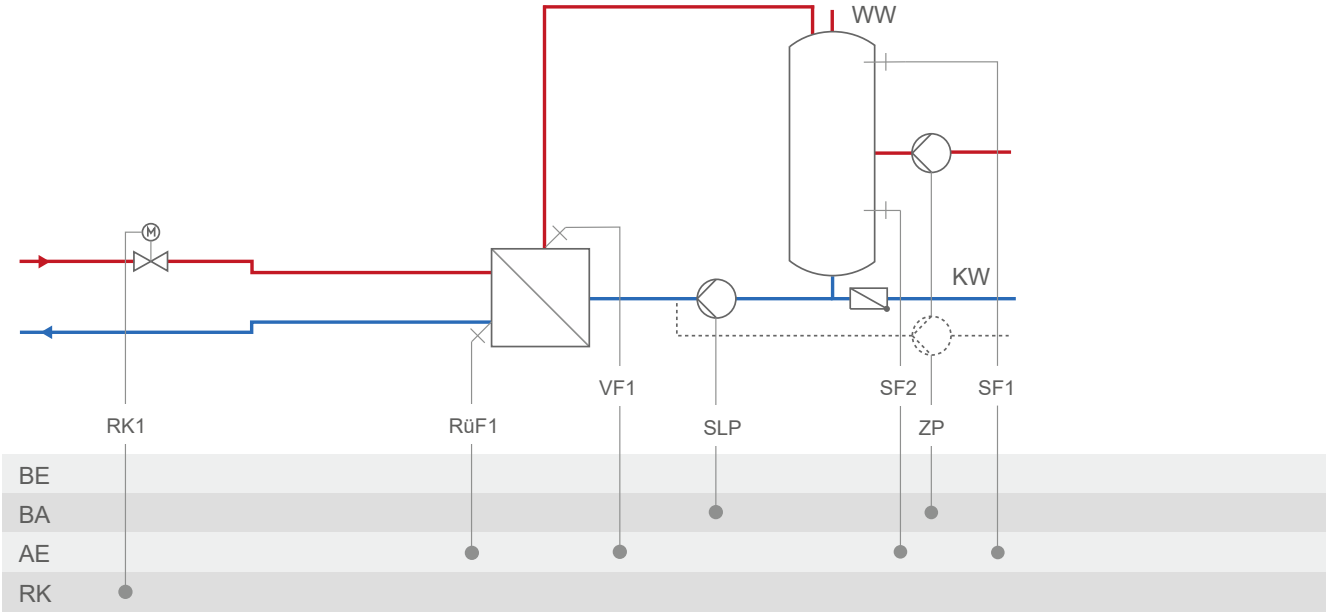

System	1.6-1
	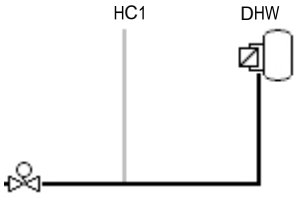
Default setting	
CO1 → F03	- 1 (with RüF1)
CO4 → F01	- 1 (with SF1)
CO4 → F02	- 1 (with SF2)
CO4 → F10	- 0 (DHW circulation return in storage tank)
CO5 → F07	- 0 (without error message at terminal 43)
CO5 → F34, F35, F36, F37	Function AA1, AA2, AA3, AA4: – Control signal Y1 (RK1) – External demand — When CO1 → F18 - 1 – SLP speed — When CO4 → F21 - 1 – ZP speed — When CO4 → F25 - 1

System 1.6-2

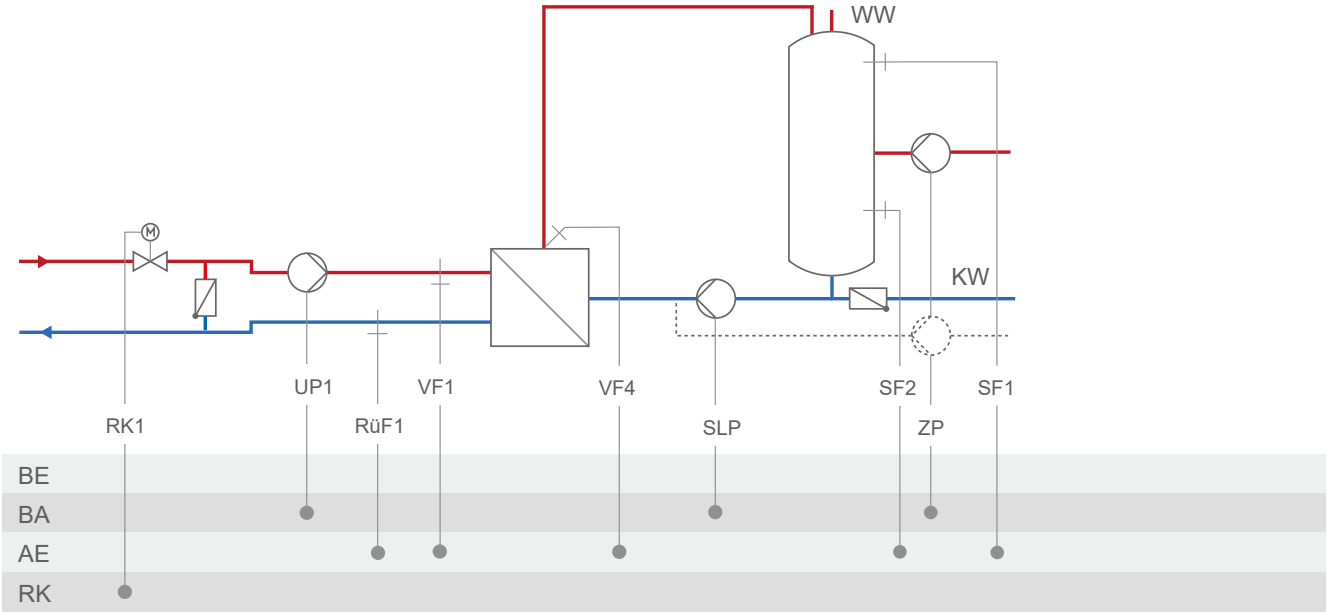

System	1.6-2
	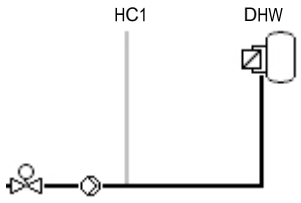
Default setting	
CO1 → F03	- 1 (with RüF1)
CO4 → F01	- 1 (with SF1)
CO4 → F02	- 1 (with SF2)
CO4 → F05	- 0 (without VF4; in this case, VF1 usually installed at the point of measurement of VF4)
CO4 → F10	- 0 (DHW circulation return in storage tank)
CO5 → F07	- 0 (without error message at terminal 43)
CO5 → F34, F35, F36, F37	Function AA1, AA2, AA3, AA4: – Control signal Y1 (RK1) – External demand — When CO1 → F18 - 1 – SLP speed — When CO4 → F21 - 1 – ZP speed — When CO4 → F25 - 1

System 1.6-3

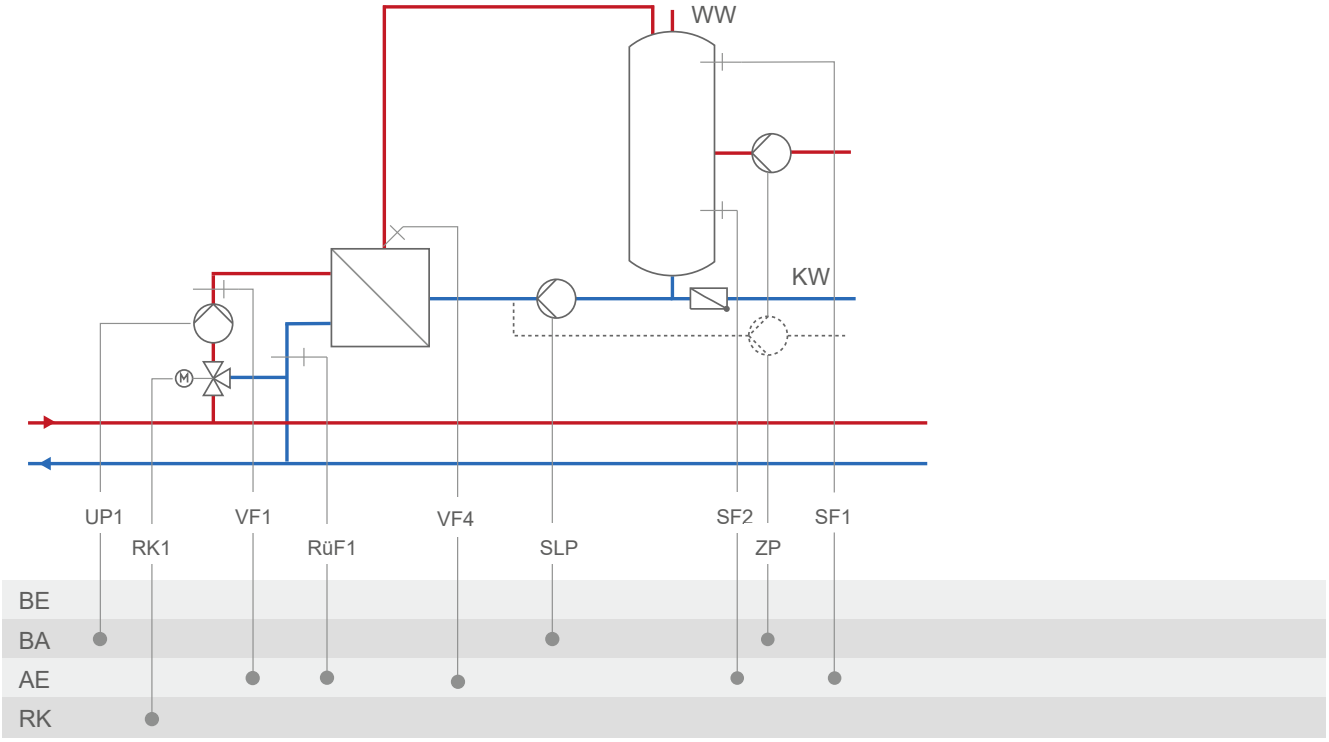

System	1.6-3
	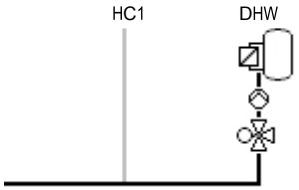
Default setting	
CO1 → F03	- 1 (with RüF1)
CO4 → F01	- 1 (with SF1)
CO4 → F02	- 1 (with SF2)
CO4 → F05	- 0 (without VF4; in this case, VF1 usually installed at the point of measurement of VF4)
CO4 → F10	- 0 (DHW circulation return in storage tank)
CO5 → F07	- 0 (without error message at terminal 43)
CO5 → F34, F35, F36, F37	Function AA1, AA2, AA3, AA4: – Control signal Y1 (RK1) – External demand — When CO1 → F18 - 1 – SLP speed — When CO4 → F21 - 1 – ZP speed — When CO4 → F25 - 1

System 1.7-1

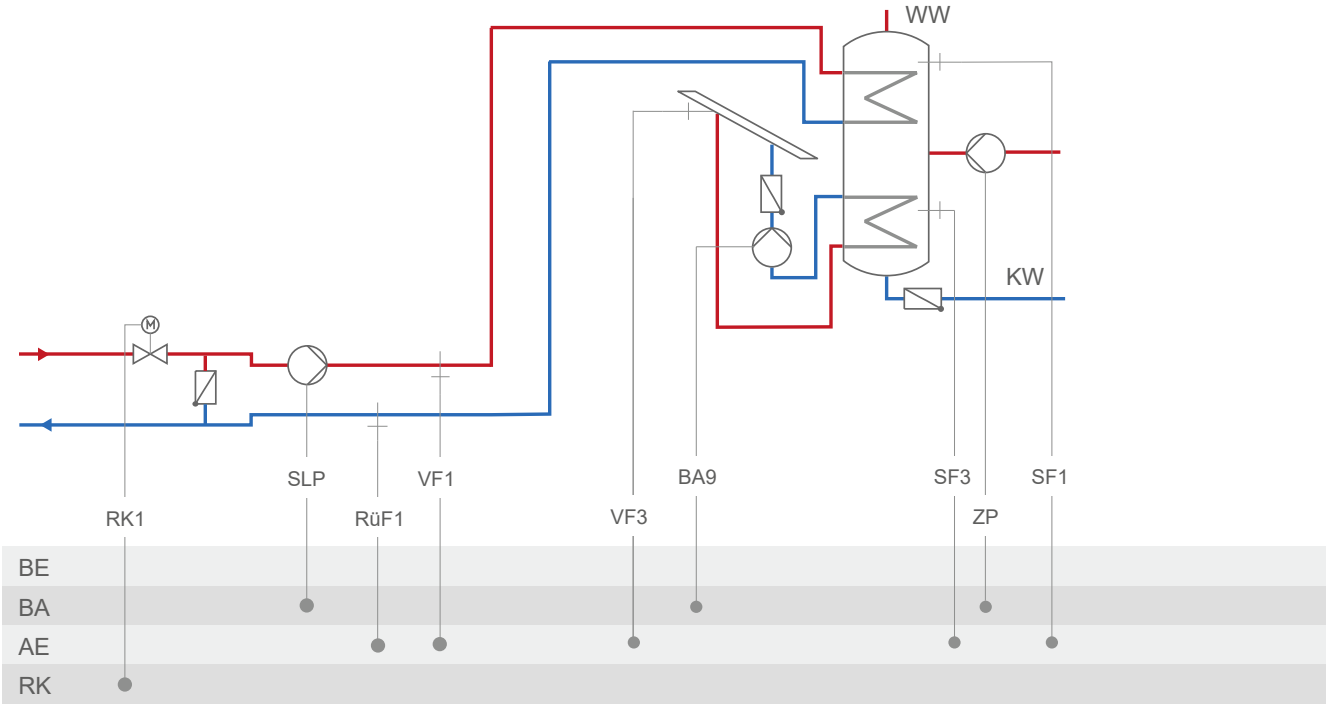

System	1.7-1
	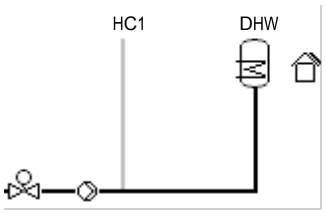
Default setting	
CO1 → F03	- 1 (with RüF1)
CO4 → F01	- 1 (with SF1)
CO4 → F02	- 0 (without SF2)
CO5 → F07	- 0 (without error message at terminal 43)
CO5 → F34, F35, F36, F37	Function AA1, AA2, AA3, AA4: – Control signal Y1 (RK1) – External demand — When CO1 → F18 - 1 – SLP speed — When CO4 → F21 - 1 – ZP speed — When CO4 → F25 - 1

System 1.7-2

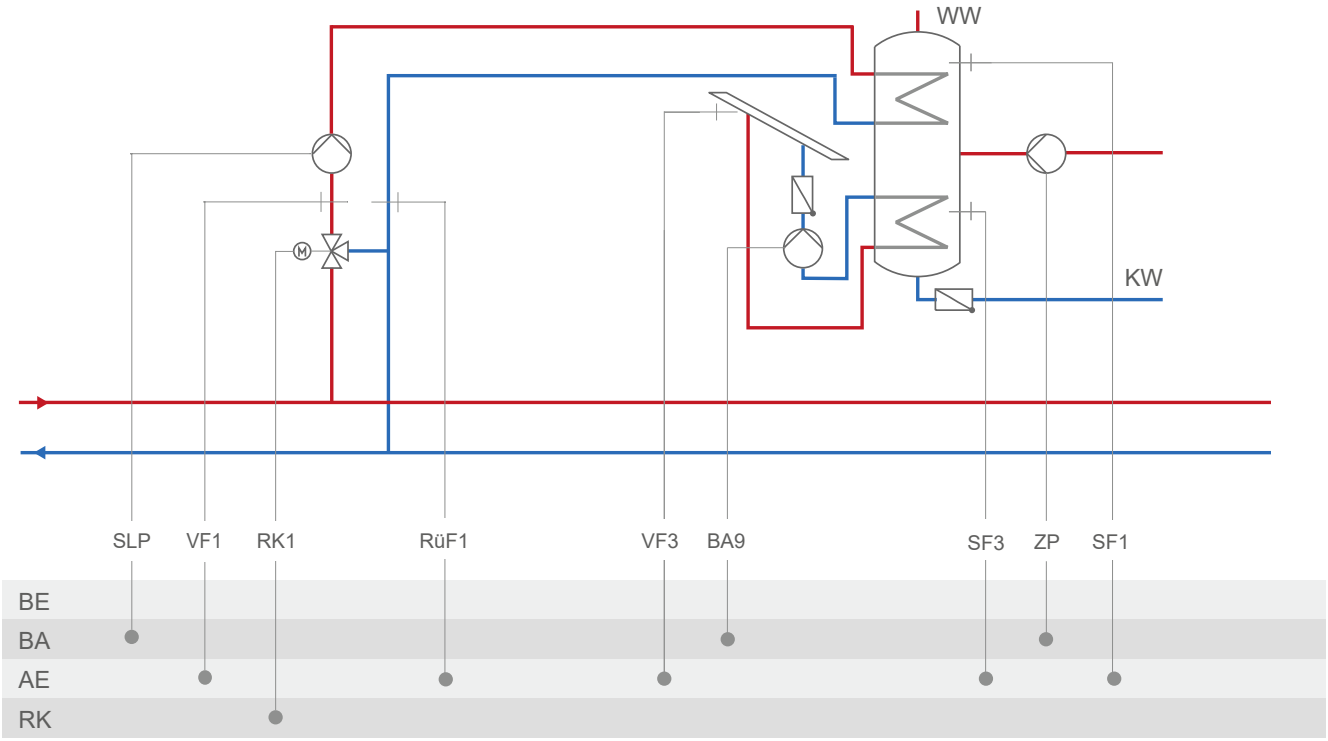

System	1.7-2
	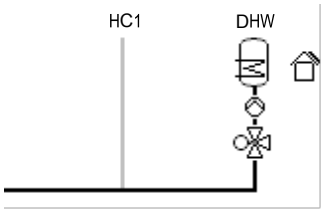
Default setting	
CO1 → F03	- 1 (with RüF1)
CO4 → F01	- 1 (with SF1)
CO4 → F02	- 0 (without SF2)
CO5 → F07	- 0 (without error message at terminal 43)
CO5 → F34, F35, F36, F37	Function AA1, AA2, AA3, AA4: – Control signal Y1 (RK1) – External demand — When CO1 → F18 - 1 – SLP speed — When CO4 → F21 - 1 – ZP speed — When CO4 → F25 - 1

System 1.8-1

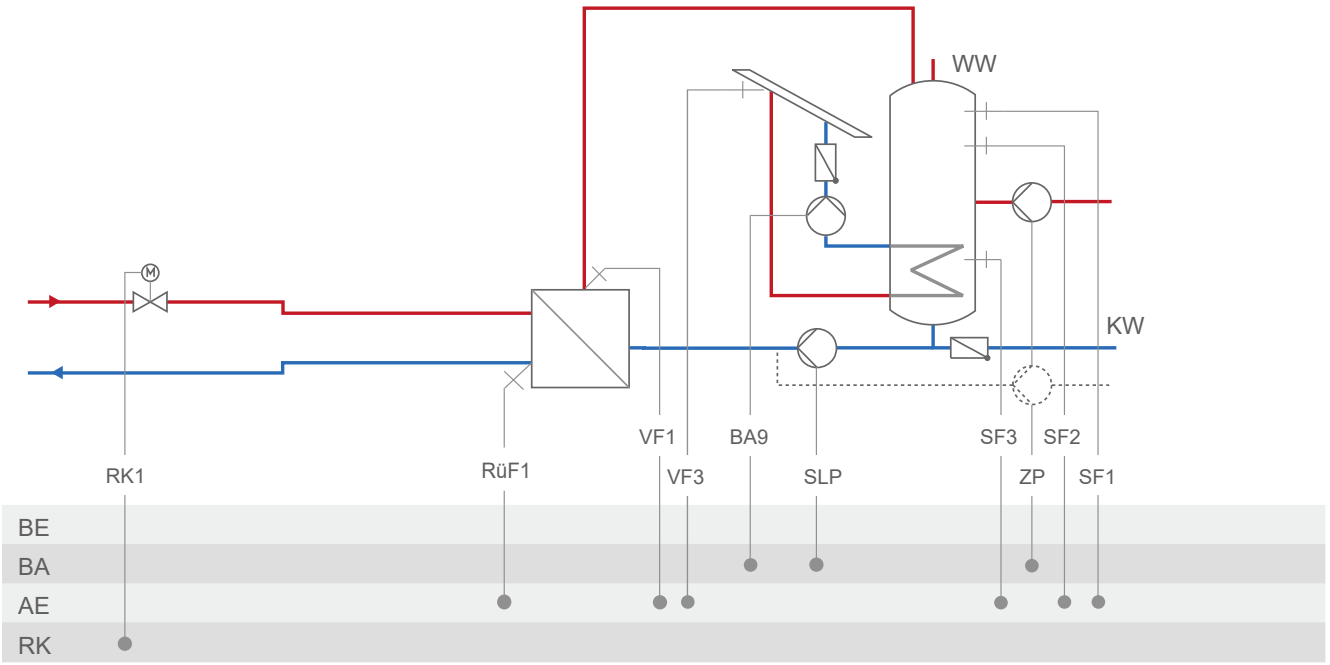

System	1.8-1
	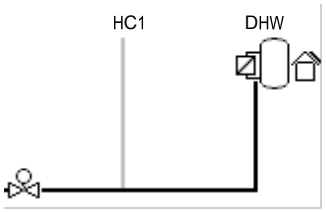
Default setting	
CO1 → F03	- 1 (with RüF1)
CO4 → F01	- 1 (with SF1)
CO4 → F02	- 1 (with SF2)
CO4 → F10	- 0 (DHW circulation return in storage tank)
CO5 → F07	- 0 (without error message at terminal 43)
CO5 → F34, F35, F36, F37	Function AA1, AA2, AA3, AA4: – Control signal Y1 (RK1) – External demand — When CO1 → F18 - 1 – SLP speed — When CO4 → F21 - 1 – ZP speed — When CO4 → F25 - 1

System 1.8-2

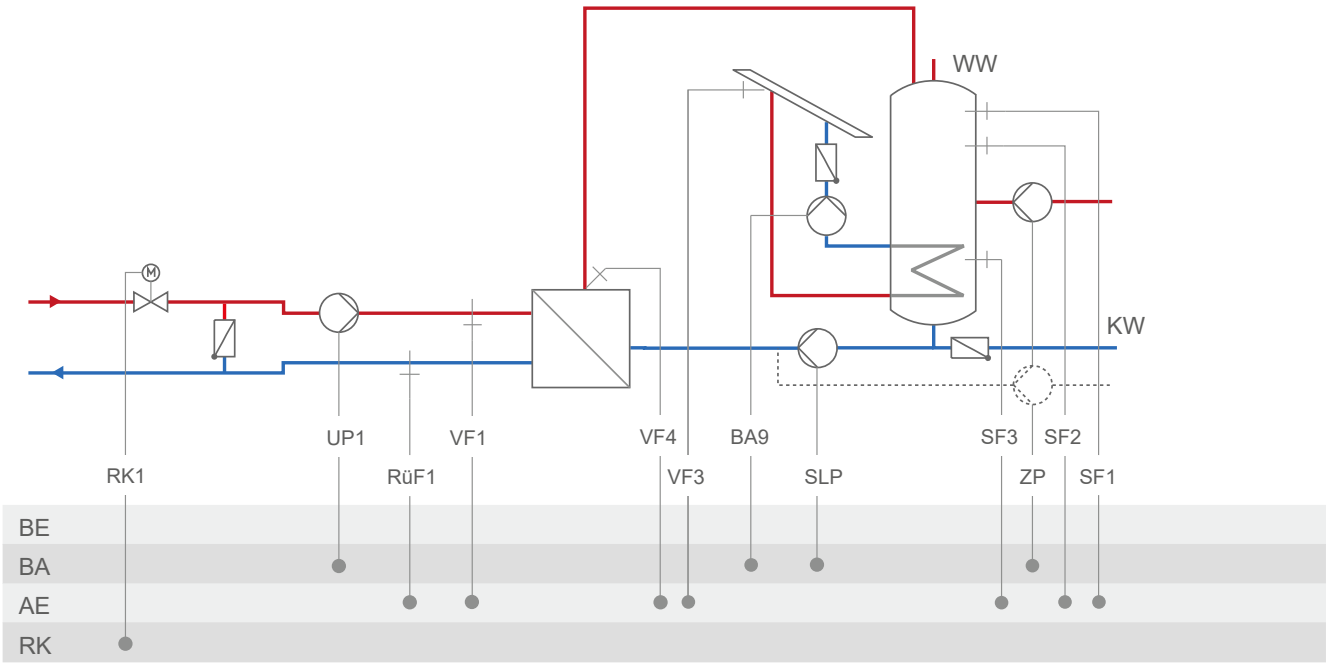

System	1.8-2
	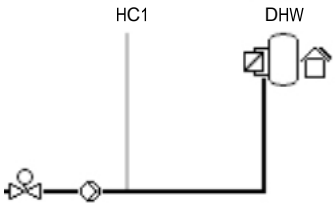
Default setting	
CO1 → F03	- 1 (with RüF1)
CO4 → F01	- 1 (with SF1)
CO4 → F02	- 1 (with SF2)
CO4 → F05	- 0 (without VF4; in this case, VF1 usually installed at the point of measurement of VF4)
CO4 → F10	- 0 (DHW circulation return in storage tank)
CO5 → F07	- 0 (without error message at terminal 43)
CO5 → F34, F35, F36, F37	Function AA1, AA2, AA3, AA4: – Control signal Y1 (RK1) – External demand — When CO1 → F18 - 1 – SLP speed — When CO4 → F21 - 1 – ZP speed — When CO4 → F25 - 1

System 1.8-3

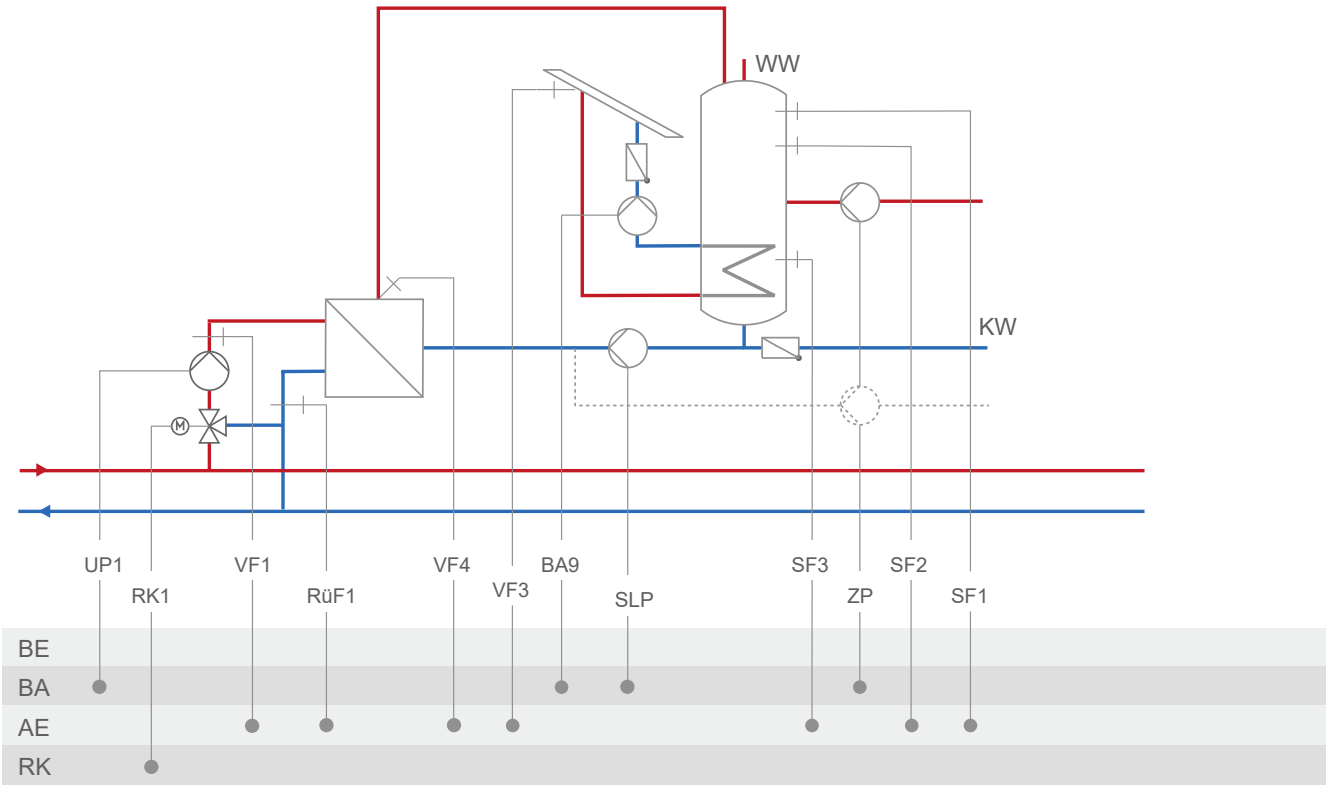

System	1.8-3
	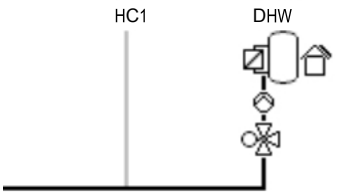
Default setting	
CO1 → F03	- 1 (with RüF1)
CO4 → F01	- 1 (with SF1)
CO4 → F02	- 1 (with SF2)
CO4 → F05	- 0 (without VF4; in this case, VF1 usually installed at the point of measurement of VF4)
CO4 → F10	- 0 (DHW circulation return in storage tank)
CO5 → F07	- 0 (without error message at terminal 43)
CO5 → F34, F35, F36, F37	Function AA1, AA2, AA3, AA4: – Control signal Y1 (RK1) – External demand — When CO1 → F18 - 1 – SLP speed — When CO4 → F21 - 1 – ZP speed — When CO4 → F25 - 1

System 1.9-1

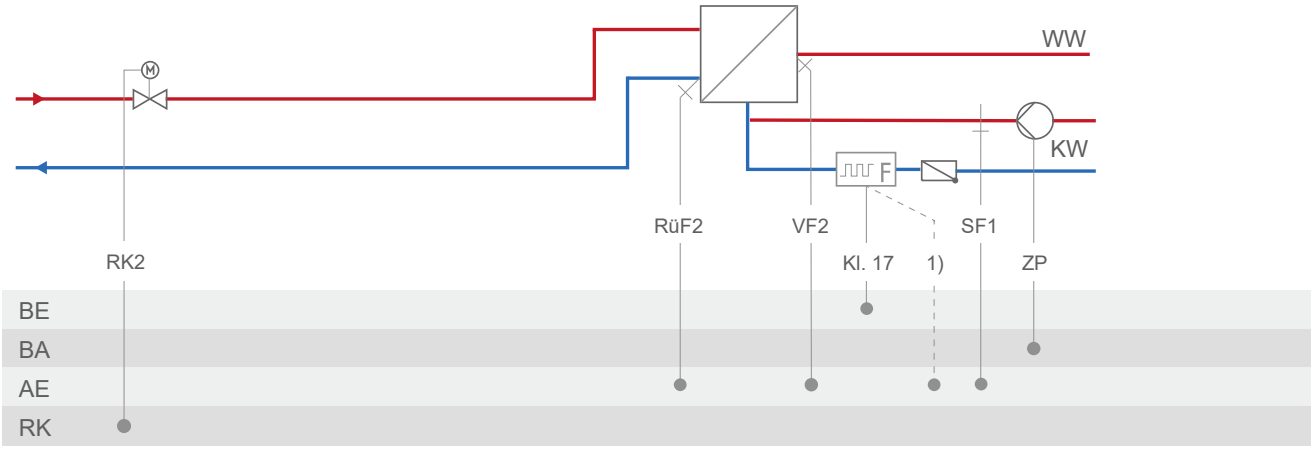

1) bei Vortex-Sensor Kl. 15, 16 oder 17

System	1.9-1
	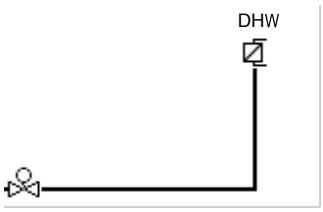
Default setting	
CO4 → F01	- 0 (without SF1)
CO4 → F03	- 0 (without RüF2)
CO4 → F04	- 0 (without water flow sensor)
CO5 → F07	- 0 (without error message at terminal 37)
CO5 → F34, F35, F36, F37	Function AA1, AA2, AA3, AA4: – Control signal Y2 (RK2) – 5 V supply – 10 V supply – External demand — When CO1 → F18 - 1 – ZP speed — When CO4 → F25 - 1

System 1.9-2

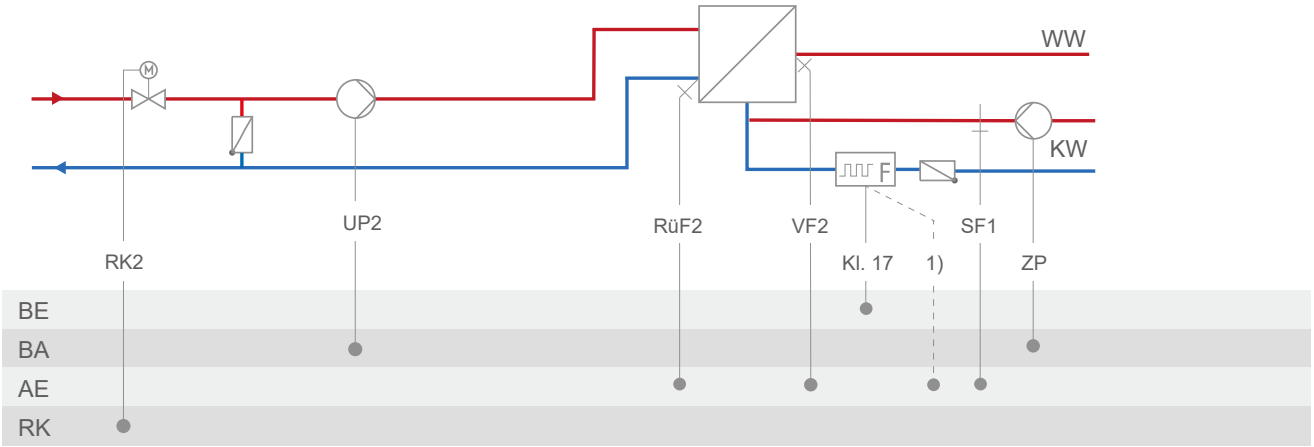

[1] bei Vortex-Sensor Kl. 15, 16 oder 17

System	1.9-2
	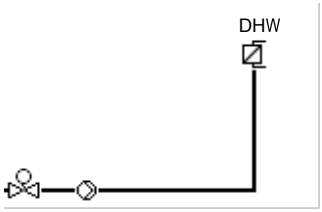
Default setting	
CO4 → F01	- 0 (without SF1)
CO4 → F03	- 0 (without RüF2)
CO4 → F04	- 0 (without water flow sensor)
CO5 → F07	- 0 (without error message at terminal 37)
CO5 → F34, F35, F36, F37	Function AA1, AA2, AA3, AA4: – Control signal Y2 (RK2) – 5 V supply – 10 V supply – External demand — When CO1 → F18 - 1 – ZP speed — When CO4 → F25 - 1

System 2.0

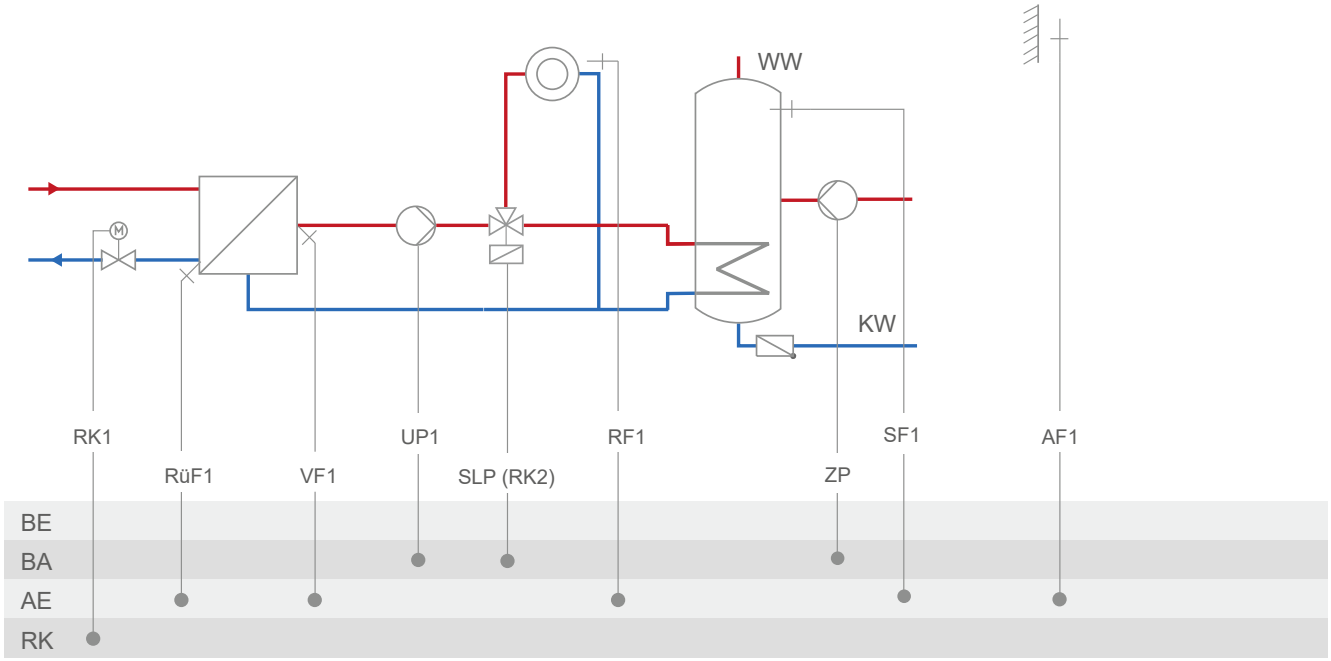

System	2.0
	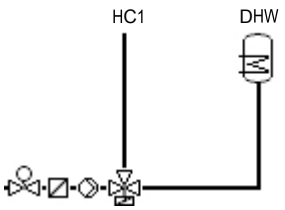
Default setting	
CO1 → F01	- 0 (without RF1)
CO1 → F02	- 1 (with AF1)
CO1 → F03	- 1 (with RüF1)
CO4 → F01	- 1 (with SF1)
CO4 → F02	- 0 (without SF2)
CO5 → F07	- 0 (without error message at terminal 43)
CO5 → F34, F35, F36, F37	Function AA1, AA2, AA3, AA4: – Control signal Y1 (RK1) – External demand — When CO1 → F18 - 1 – ZP speed — When CO4 → F25 - 1 – Outdoor temperature — When CO5 → F23 - 1 Direction 'Output'

System 2.1

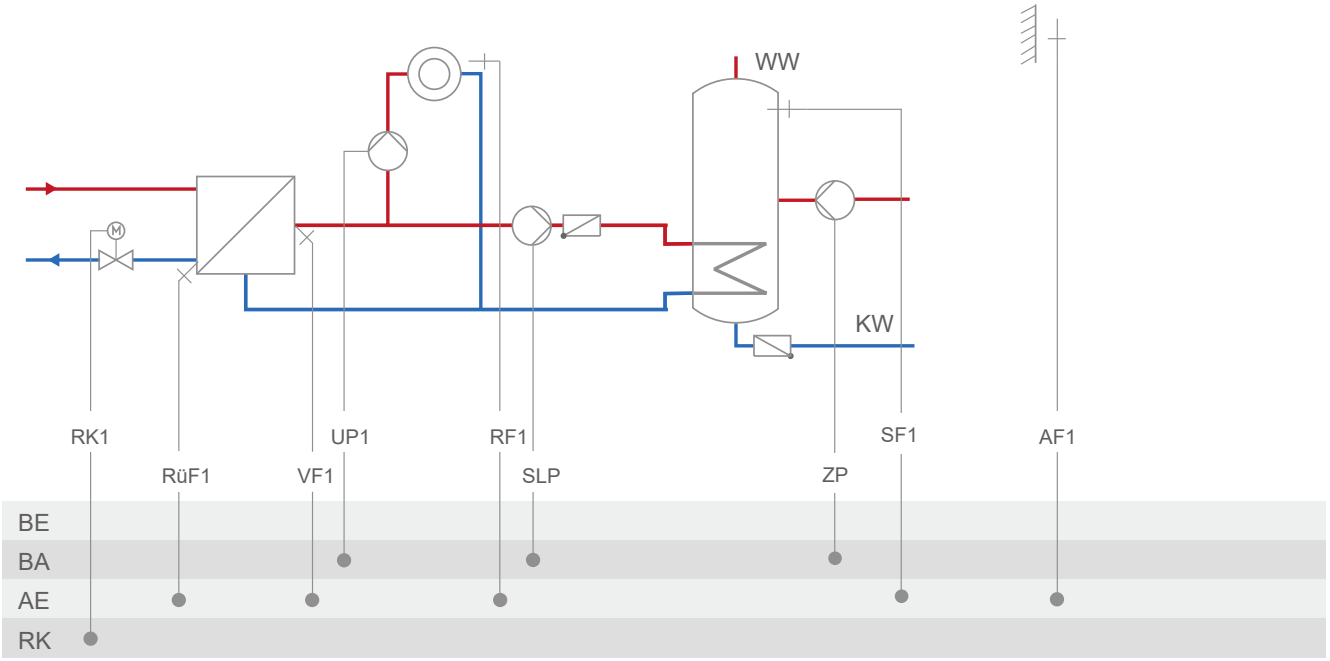

System	2.1
	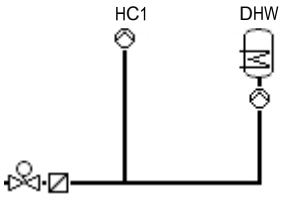
Default setting	
CO1 → F01	- 0 (without RF1)
CO1 → F02	- 1 (with AF1)
CO1 → F03	- 1 (with RüF1)
CO4 → F01	- 1 (with SF1)
CO4 → F02	- 0 (without SF2)
CO5 → F07	- 0 (without error message at terminal 43)
CO5 → F34, F35, F36, F37	Function AA1, AA2, AA3, AA4: – Control signal Y1 (RK1) – External demand — When CO1 → F18 - 1 – SLP speed — When CO4 → F21 - 1 – ZP speed — When CO4 → F25 - 1 – Outdoor temperature — When CO5 → F23 - 1 Direction 'Output'

System 2.2

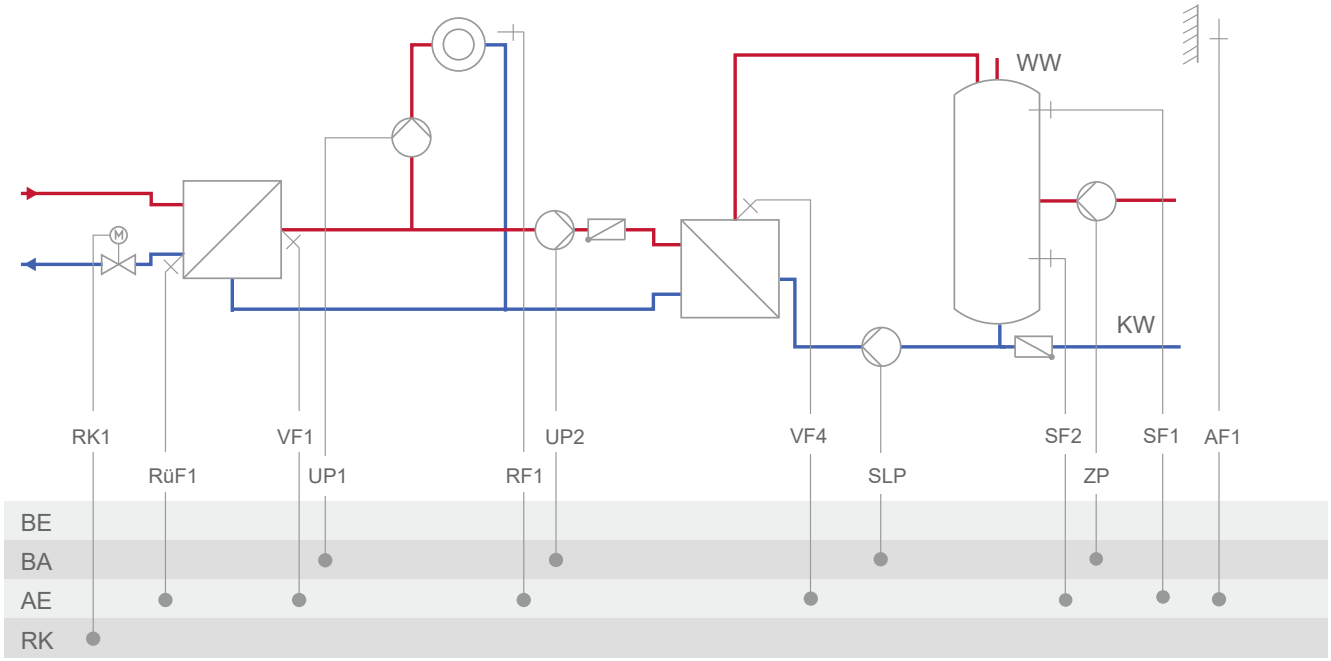

System	2.2
	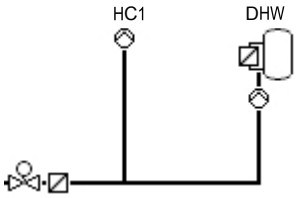
Default setting	
CO1 → F01	- 0 (without RF1)
CO1 → F02	- 1 (with AF1)
CO1 → F03	- 1 (with RüF1)
CO4 → F01	- 1 (with SF1)
CO4 → F02	- 1 (with SF2)
CO4 → F05	- 0 (without VF4)
CO5 → F07	- 0 (without error message at terminal 43)
CO5 → F34, F35, F36, F37	Function AA1, AA2, AA3, AA4: – Control signal Y1 (RK1) – External demand — When CO1 → F18 - 1 – SLP speed — When CO4 → F21 - 1 – ZP speed — When CO4 → F25 - 1 – Outdoor temperature — When CO5 → F23 - 1 Direction 'Output'

System 2.3

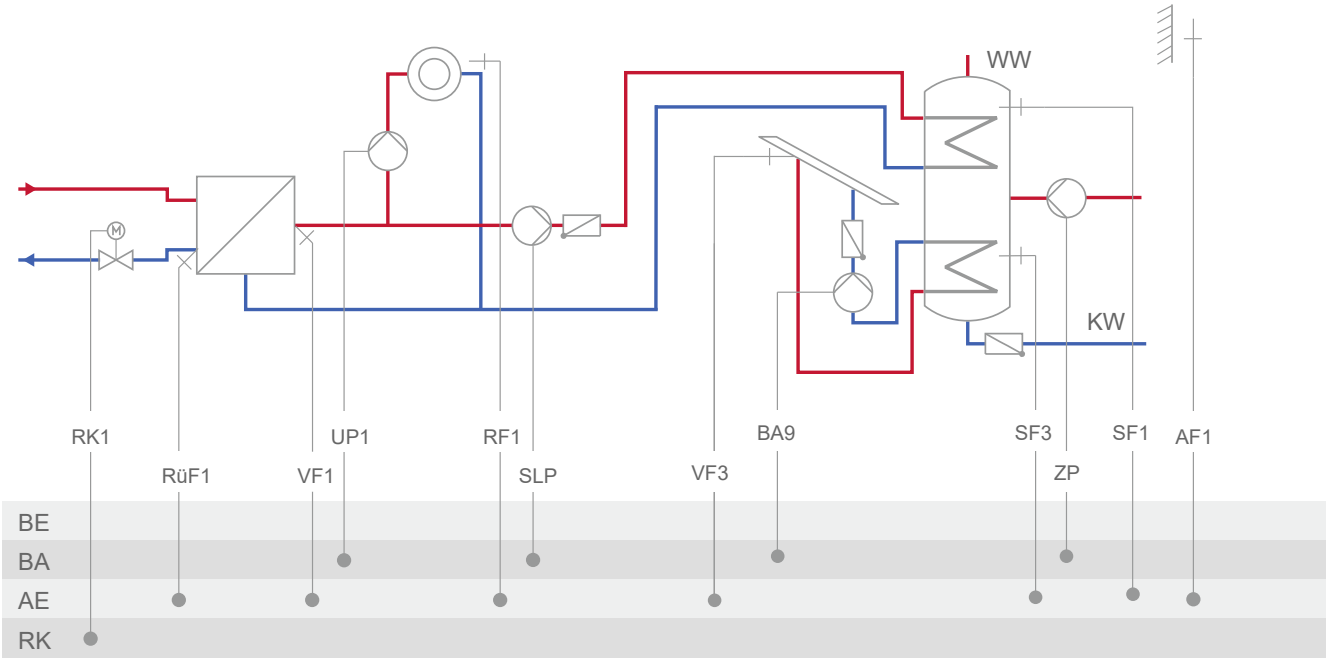

System	2.3
	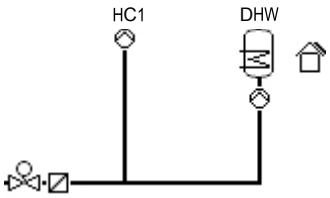
Default setting	
CO1 → F01	- 0 (without RF1)
CO1 → F02	- 1 (with AF1)
CO1 → F03	- 1 (with RüF1)
CO4 → F01	- 1 (with SF1)
CO4 → F02	- 0 (without SF2)
CO5 → F07	- 0 (without error message at terminal 43)
CO5 → F34, F35, F36, F37	Function AA1, AA2, AA3, AA4: – Control signal Y1 (RK1) – External demand — When CO1 → F18 - 1 – SLP speed — When CO4 → F21 - 1 – ZP speed — When CO4 → F25 - 1 – Outdoor temperature — When CO5 → F23 - 1 Direction 'Output'

System 2.4

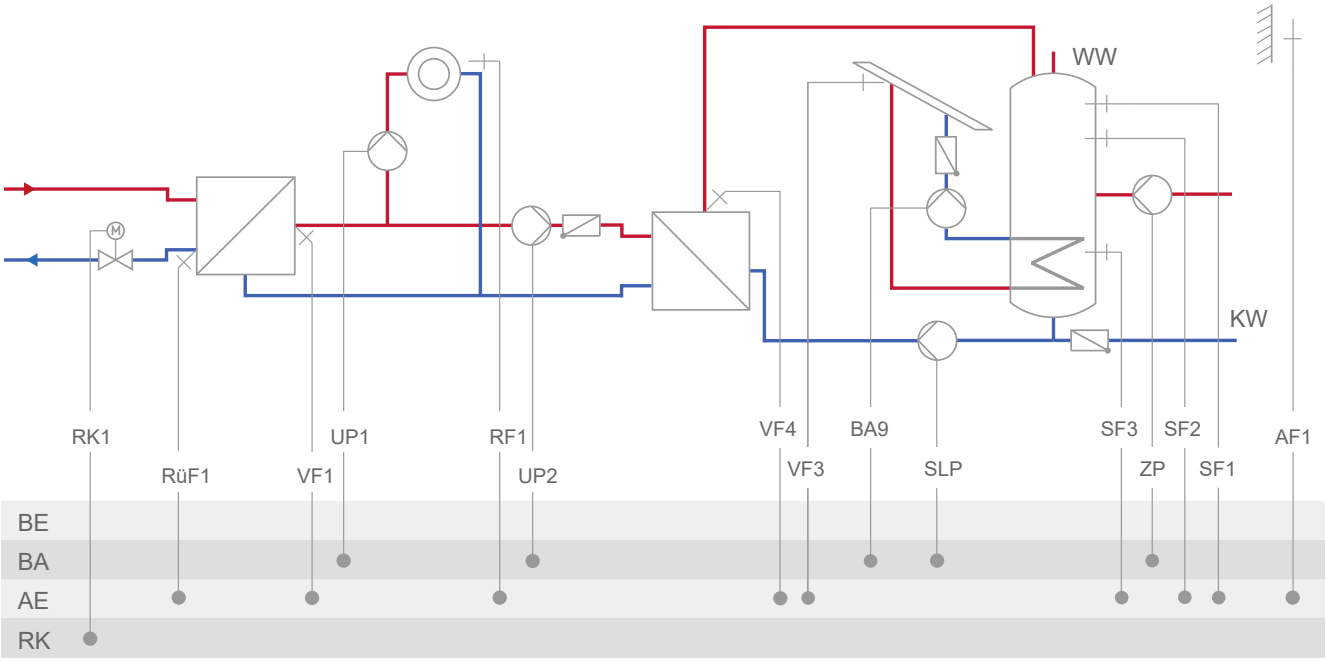

System	2.4
	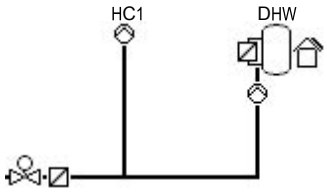
Default setting	
CO1 → F01	- 0 (without RF1)
CO1 → F02	- 1 (with AF1)
CO1 → F03	- 1 (with RüF1)
CO4 → F01	- 1 (with SF1)
CO4 → F02	- 1 (with SF2)
CO4 → F05	- 0 (without VF4)
CO5 → F07	- 0 (without error message at terminal 43)
CO5 → F34, F35, F36, F37	Function AA1, AA2, AA3, AA4: – Control signal Y1 (RK1) – External demand — When CO1 → F18 - 1 – SLP speed — When CO4 → F21 - 1 – ZP speed — When CO4 → F25 - 1 – Outdoor temperature — When CO5 → F23 - 1 Direction 'Output'

System 3.0

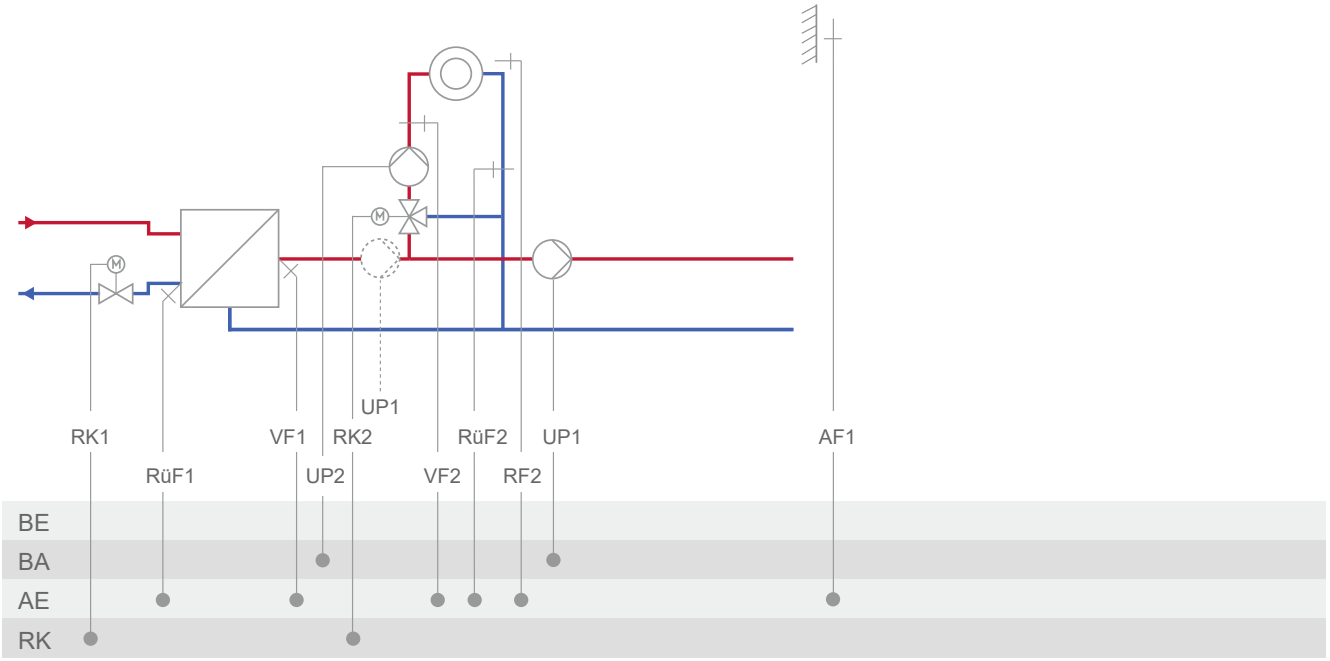

System	3.0
	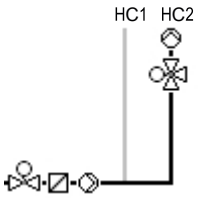
Default setting	
CO1 → F02	- 1 (with AF1)
CO1 → F03	- 1 (with RüF1)
CO2 → F01	- 0 (without RF2)
CO2 → F02	- 1 (with AF1)
CO2 → F03	- 0 (without RüF2)
CO5 → F07	- 0 (without error message at terminal 37)
CO5 → F14	- 0 (UP1 only active during the processing for an external demand)
CO5 → F34, F35, F36, F37	Function AA1, AA2, AA3, AA4: – Control signal Y1 (RK1) – Control signal Y2 (RK2) – External demand — When CO1 → F18 - 1 – Outdoor temperature — When CO5 → F23 - 1 Direction 'Output'

System 3.1

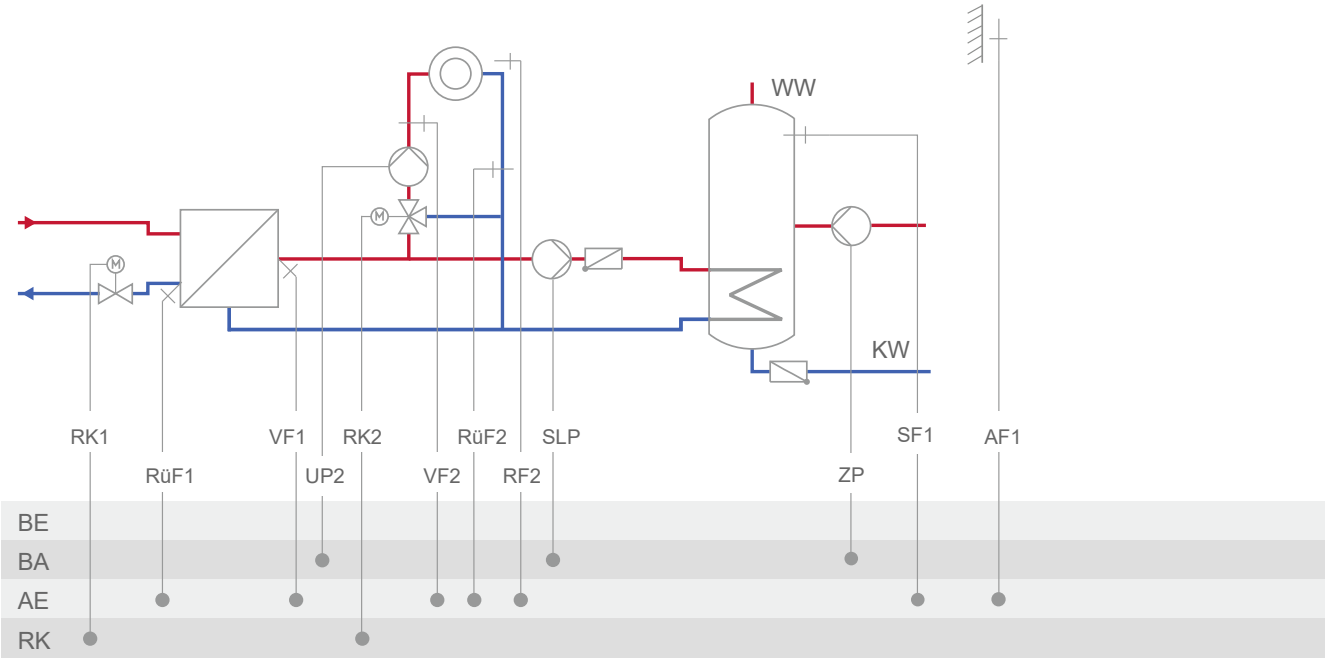

System	3.1
	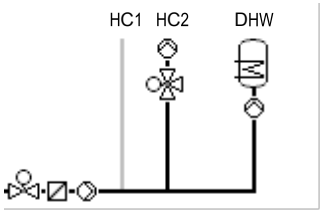
Default setting	
CO1 → F01	- 0 (without RF1)
CO1 → F02	- 1 (with AF1)
CO1 → F03	- 1 (with RüF1)
CO2 → F01	- 0 (without RF2)
CO2 → F02	- 1 (with AF1)
CO2 → F03	- 0 (without RüF2)
CO4 → F01	- 1 (with SF1)
CO4 → F02	- 0 (without SF2)
CO5 → F07	- 0 (without error message at terminal 46)
CO5 → F34, F35, F36, F37	Function AA1, AA2, AA3, AA4: – Control signal Y1 (RK1) – Control signal Y2 (RK2) – External demand — When CO1 → F18 - 1 – SLP speed — When CO4 → F21 - 1 – ZP speed — When CO4 → F25 - 1 – Outdoor temperature — When CO5 → F23 - 1 Direction 'Output'

System 3.2

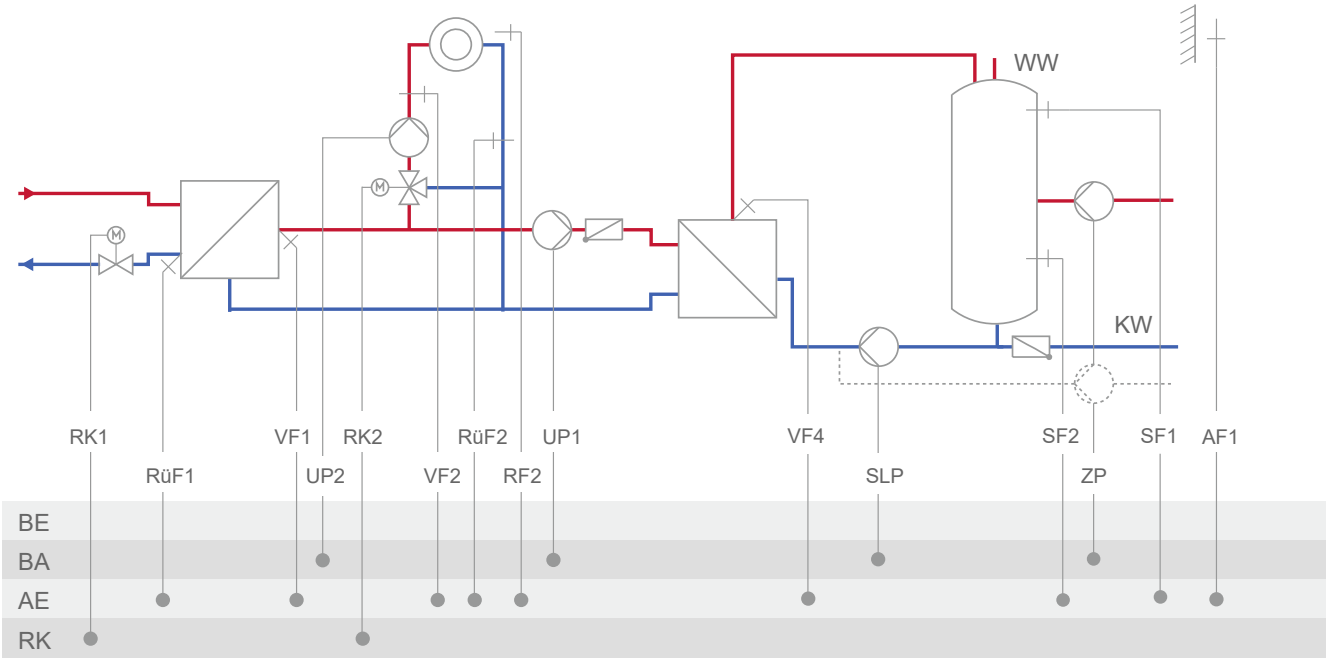

System	3.2
	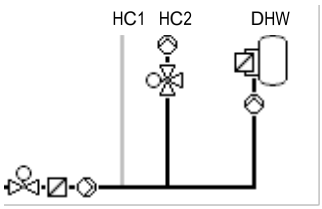
Default setting	
CO1 → F01	- 0 (without RF1)
CO1 → F02	- 1 (with AF1)
CO1 → F03	- 1 (with RüF1)
CO2 → F01	- 0 (without RF2)
CO2 → F02	- 1 (with AF1)
CO2 → F03	- 0 (without RüF2)
CO4 → F01	- 1 (with SF1)
CO4 → F02	- 1 (with SF2)
CO4 → F05	- 0 (without VF4)
CO4 → F10	- 0 (DHW circulation return in storage tank)
CO5 → F07	- 0 (without error message at terminal 46)
CO5 → F34, F35, F36, F37	Function AA1, AA2, AA3, AA4: – Control signal Y1 (RK1) – Control signal Y2 (RK2) – External demand — When CO1 → F18 - 1 – SLP speed — When CO4 → F21 - 1 – ZP speed — When CO4 → F25 - 1 – Outdoor temperature — When CO5 → F23 - 1 Direction 'Output'

System 3.3

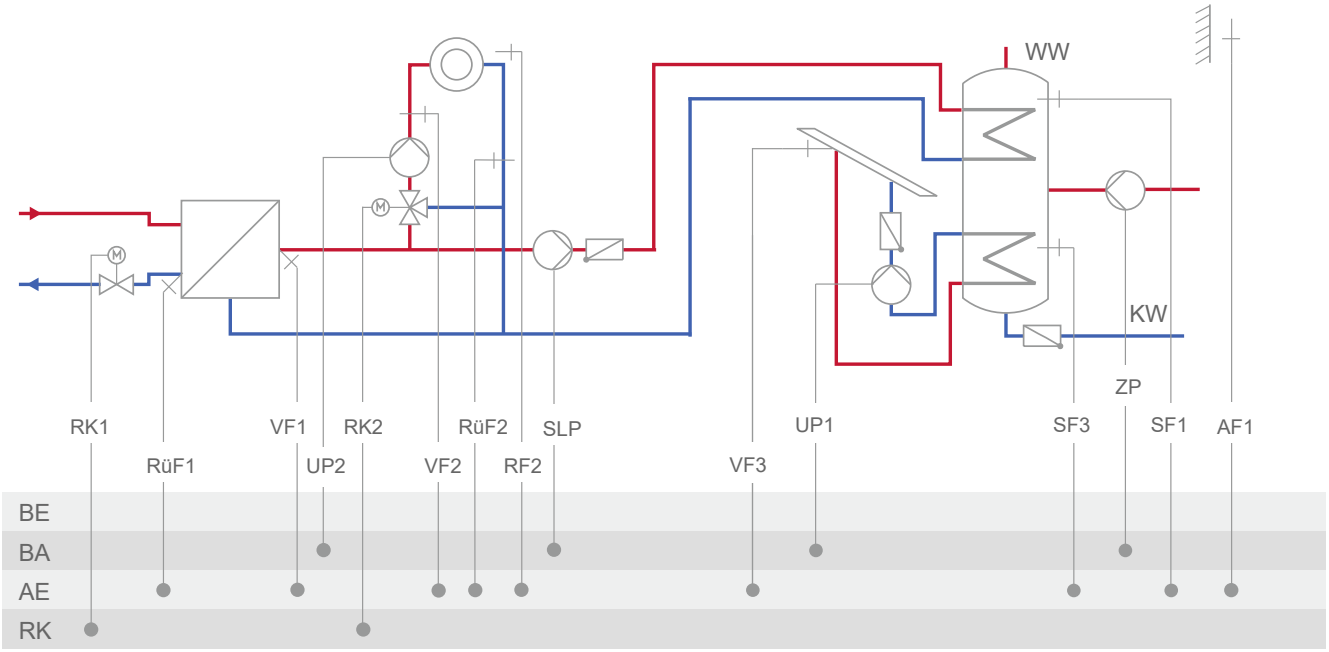

System	3.3
	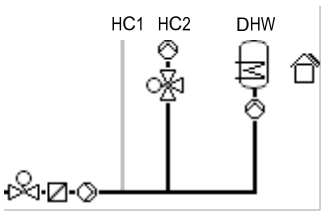
Default setting	
CO1 → F01	- 0 (without RF1)
CO1 → F02	- 1 (with AF1)
CO1 → F03	- 1 (with RüF1)
CO2 → F01	- 0 (without RF2)
CO2 → F02	- 1 (with AF1)
CO2 → F03	- 0 (without RüF2)
CO4 → F01	- 1 (with SF1)
CO4 → F02	- 0 (without SF2)
CO5 → F07	- 0 (without error message at terminal 46)
CO5 → F34, F35, F36, F37	Function AA1, AA2, AA3, AA4: – Control signal Y1 (RK1) – Control signal Y2 (RK2) – External demand — When CO1 → F18 - 1 – SLP speed — When CO4 → F21 - 1 – ZP speed — When CO4 → F25 - 1 – Outdoor temperature — When CO5 → F23 - 1 Direction 'Output'

System 3.4

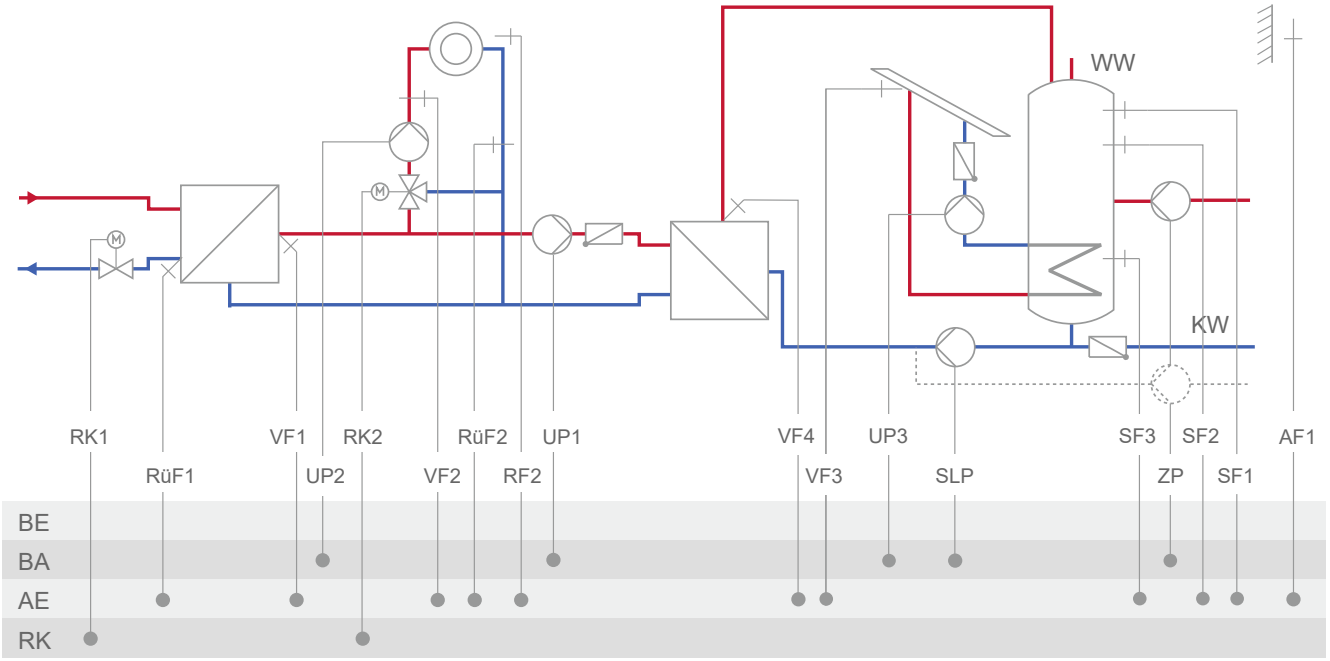

System	3.4
	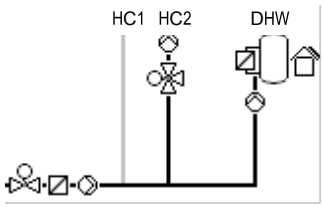
Default setting	
CO1 → F01	- 0 (without RF1)
CO1 → F02	- 1 (with AF1)
CO1 → F03	- 1 (with RüF1)
CO2 → F01	- 0 (without RF2)
CO2 → F02	- 1 (with AF1)
CO2 → F03	- 0 (without RüF2)
CO4 → F01	- 1 (with SF1)
CO4 → F02	- 0 (without SF2)
CO4 → F05	- 0 (without VF4)
CO4 → F10	- 0 (DHW circulation return in storage tank)
CO5 → F07	- 0 (without error message at terminal 46)
CO5 → F34, F35, F36, F37	Function AA1, AA2, AA3, AA4: – Control signal Y1 (RK1) – Control signal Y2 (RK2) – External demand — When CO1 → F18 - 1 – SLP speed — When CO4 → F21 - 1 – ZP speed — When CO4 → F25 - 1 – Outdoor temperature — When CO5 → F23 - 1 Direction 'Output'

System 3.5

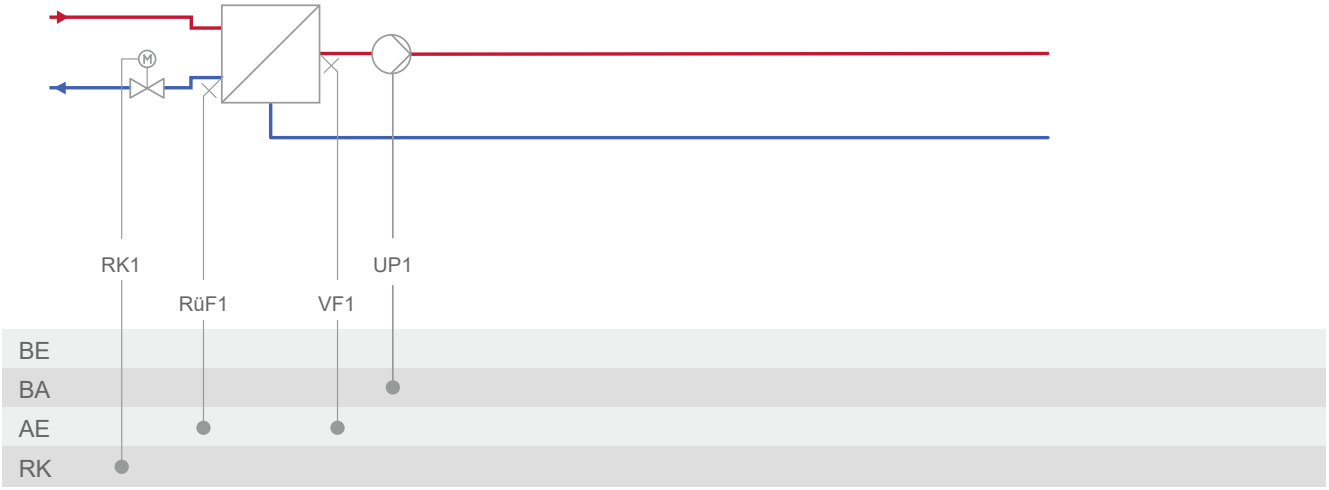

System	3.5
	
Note:	Control operation and UP1 only active during the processing for an external demand.
Default setting	
CO1 → F03	- 1 (with RüF1)
CO5 → F07	- 0 (without error message at terminal 43)
CO5 → F34, F35, F36, F37	Function AA1, AA2, AA3, AA4: – Control signal Y1 (RK1) – External demand When CO1 → F18 - 1

System 3.7

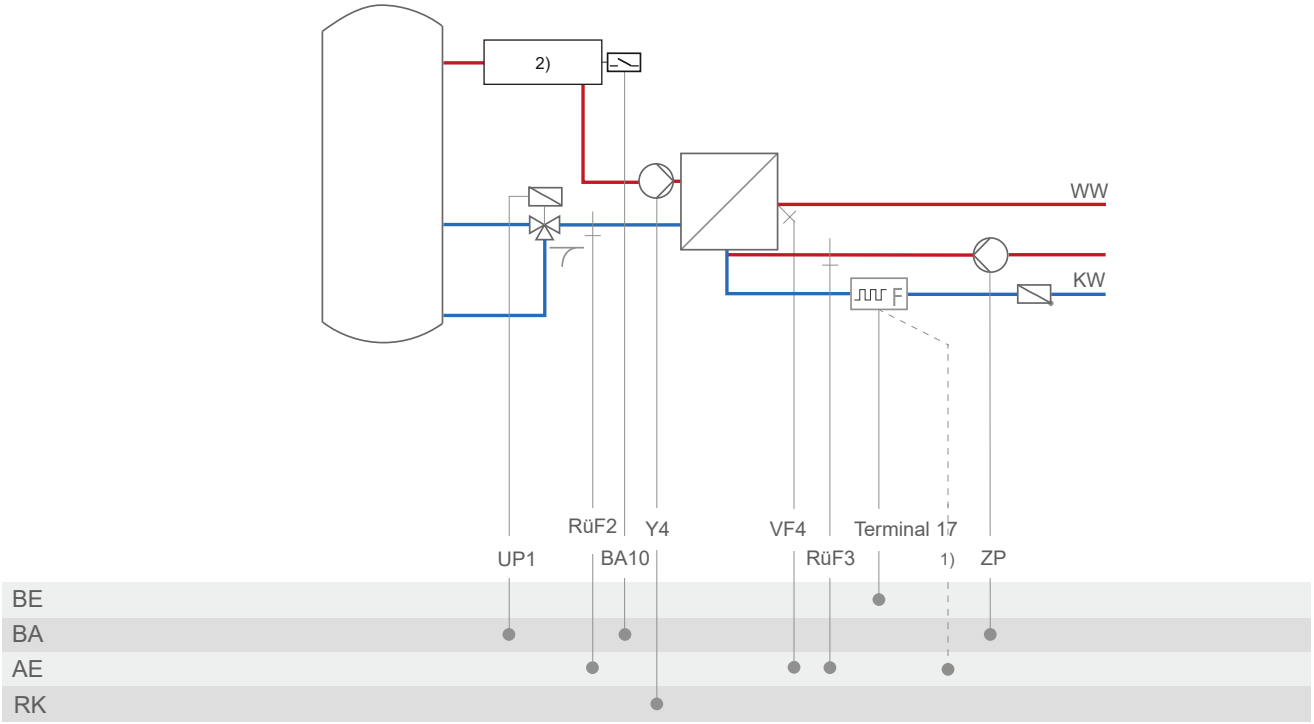

1) Terminal 15, 16 or 17 when a vortex flow sensor is used

2) Electric heating

System	3.7
	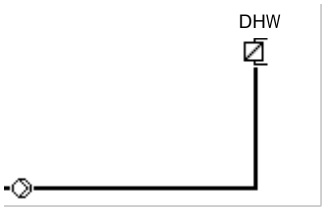
Default setting	
CO4 → F03	- 0 (without RüF2)
CO4 → F04	- 0 (without flow switch)
CO4 → F14	- 0 (without RüF3)
CO5 → F07	- 0 (without error message at terminal 46)
CO5 → F34, F35, F36, F37	Function AA1, AA2, AA3, AA4: – Control signal Y4 – 5 V supply – 10 V supply – ZP speed When CO4 → F25 - 1

System 3.8

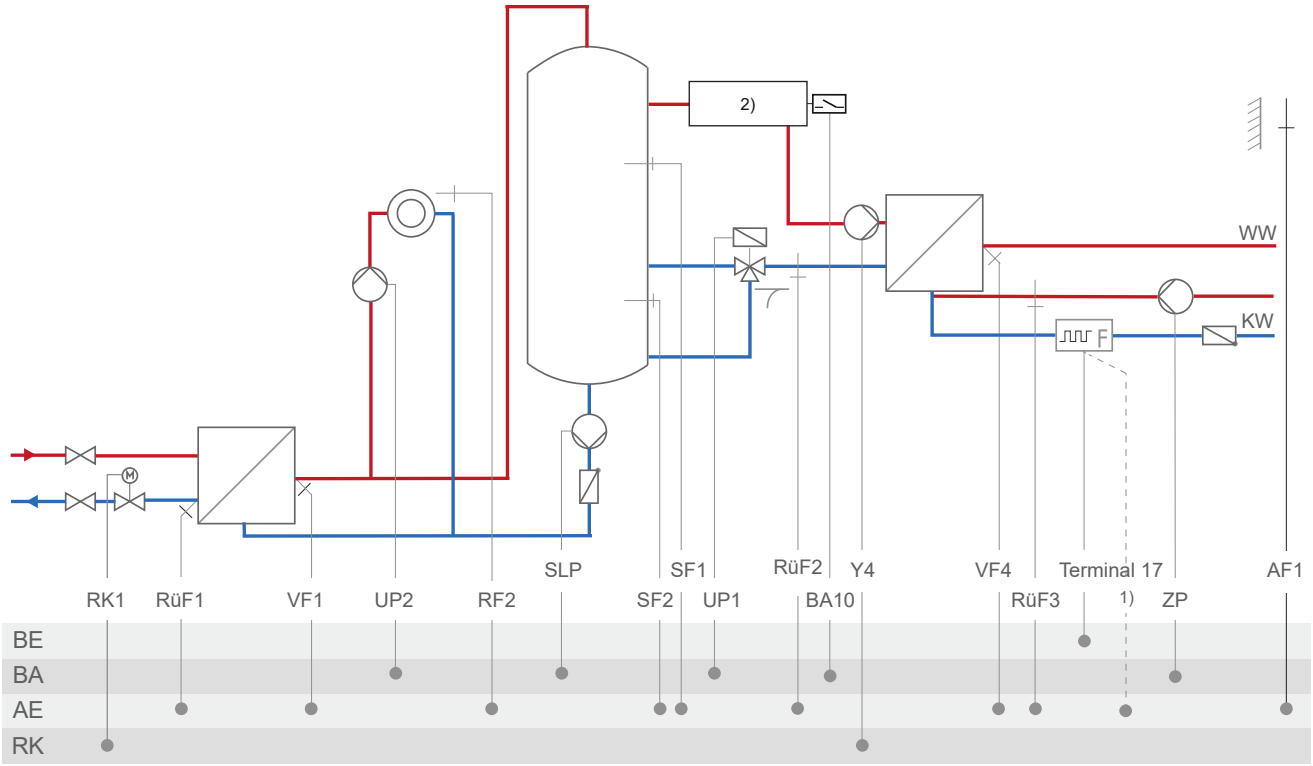

1) Terminal 15, 16 or 17 when a vortex flow sensor is used

2) Electric heating

System	**3.8**
	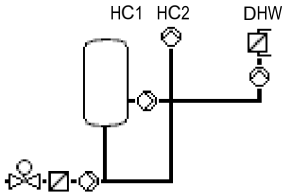
Default setting	
CO1 → F02	- 1 (with AF1)
CO1 → F03	- 1 (with RüF1)
CO1 → F06	- 1 (with SF2)
CO2 → F01	- 0 (without RF2)
CO2 → F02	- 1 (with AF1)
CO4 → F03	- 0 (without RüF2)
CO4 → F04	- 0 (without flow switch)
CO4 → F14	- 0 (without RüF3)
CO5 → F07	- 0 (without error message at terminal 46)
CO5 → F34, F35, F36, F37	Function AA1, AA2, AA3, AA4: – Control signal Y1 (RK1) – Control signal Y4 – 5 V supply – 10 V supply – External demand — When CO1 → F18 - 1 – SLP speed — When CO4 → F21 - 1 – ZP speed — When CO4 → F25 - 1 – Outdoor temperature — When CO5 → F23 - 1 Direction 'Output'

System 3.9

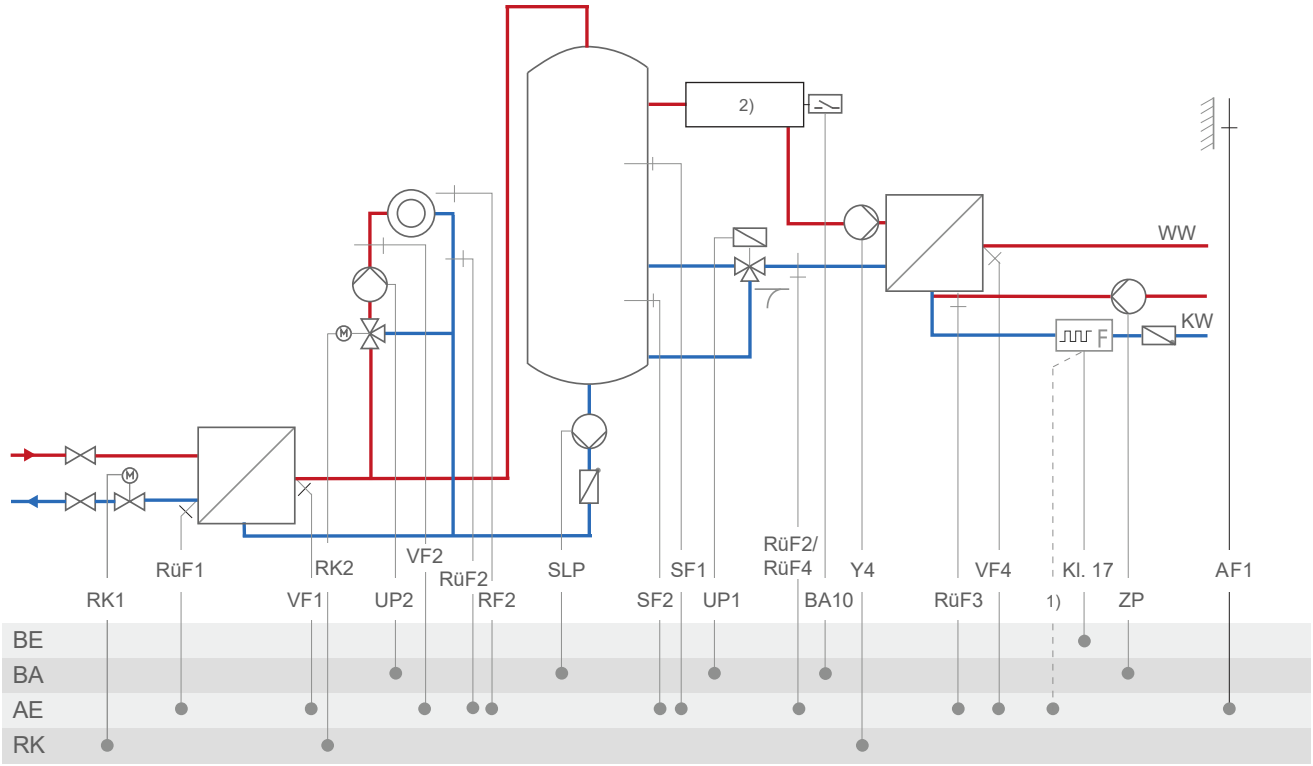

1) bei Vortex-Sensor Kl. 15, 16 oder 17

2) E-Heizung

System	**3.9**
	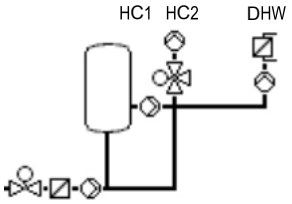
Default setting	
CO1 → F02	- 1 (with AF1)
CO1 → F03	- 1 (with RüF1)
CO1 → F06	- 1 (with SF2)
CO2 → F01	- 0 (without RF2)
CO2 → F02	- 1 (with AF1)
CO2 → F03	- 0 (without RüF2 in RK2)
CO4 → F03	- 0 (without RüF2/RüF4)
CO4 → F04	- 0 (without flow switch)
CO4 → F14	- 0 (without RüF3)
CO5 → F07	- 0 (without error message at terminal 46)
CO5 → F34, F35, F36, F37	Function AA1, AA2, AA3, AA4: – Control signal Y1 (RK1) – Control signal Y2 (RK2) – Control signal Y4 – 5 V supply – 10 V supply – External demand — When CO1 → F18 - 1 – SLP speed — When CO4 → F21 - 1 – ZP speed — When CO4 → F25 - 1 – Outdoor temperature — When CO5 → F23 - 1 Direction 'Output'

System 4.0

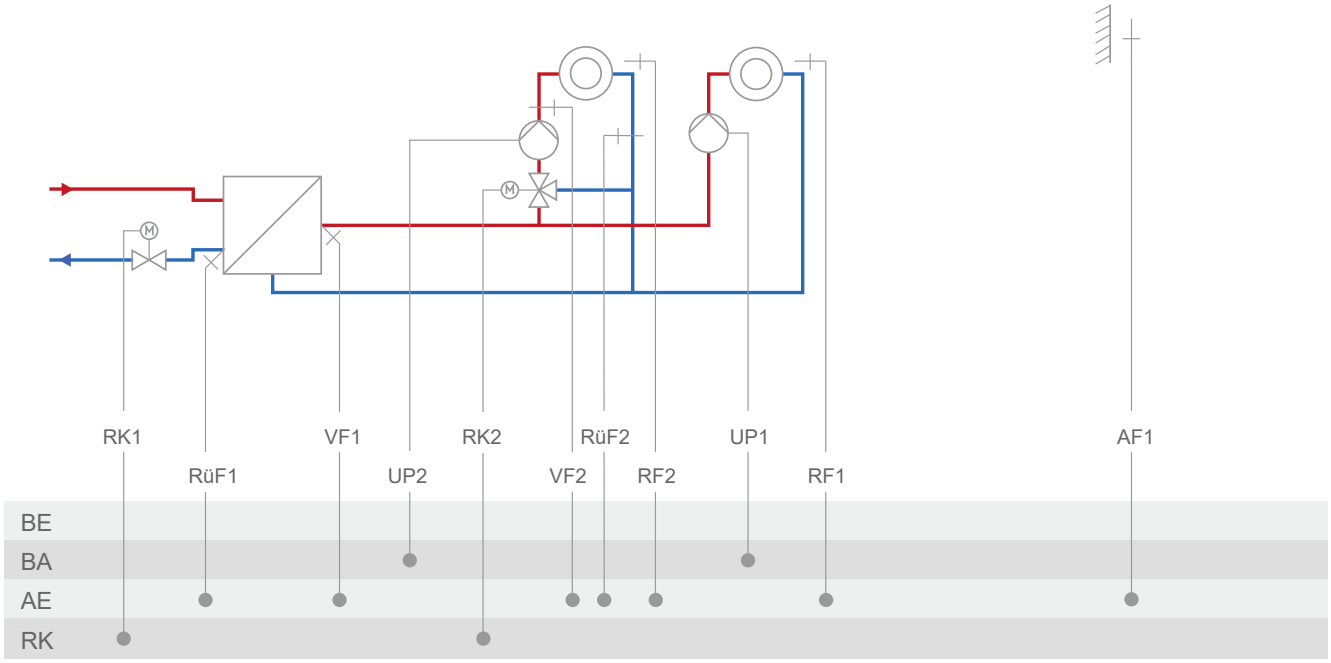

System	4.0
	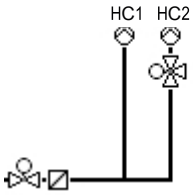
Default setting	
CO1 → F01	- 0 (without RF1)
CO1 → F02	- 1 (with AF1)
CO1 → F03	- 1 (with RüF1)
CO2 → F01	- 0 (without RF2)
CO2 → F02	- 0 (without AF1)
CO2 → F03	- 0 (without RüF2)
CO5 → F07	- 0 (without error message at terminal 37)
CO5 → F34, F35, F36, F37	Function AA1, AA2, AA3, AA4: – Control signal Y1 (RK1) – Control signal Y2 (RK2) – External demand — When CO1 → F18 - 1 – Outdoor temperature — When CO5 → F23 - 1 Direction 'Output'

System 4.1

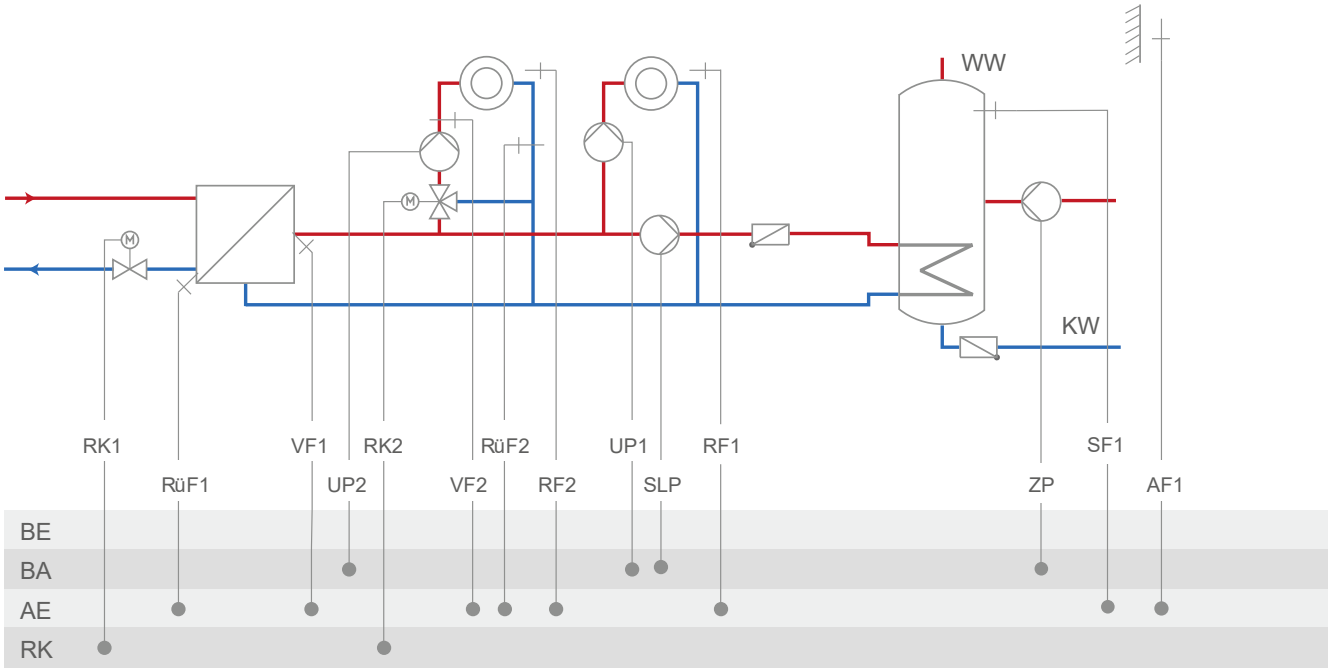

System	4.1
	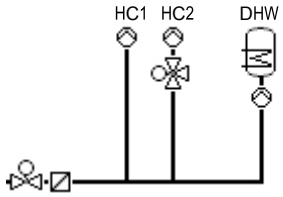
Default setting	
CO1 → F01	- 0 (without RF1)
CO1 → F02	- 1 (with AF1)
CO1 → F03	- 1 (with RüF1)
CO2 → F01	- 0 (without RF2)
CO2 → F02	- 1 (with AF1)
CO2 → F03	- 0 (without RüF2)
CO4 → F01	- 1 (with SF1)
CO4 → F02	- 0 (without SF2)
CO5 → F07	- 0 (without error message at terminal 46)
CO5 → F34, F35, F36, F37	Function AA1, AA2, AA3, AA4: – Control signal Y1 (RK1) – Control signal Y2 (RK2) – External demand — When CO1 → F18 - 1 – SLP speed — When CO4 → F21 - 1 – ZP speed — When CO4 → F25 - 1 – Outdoor temperature — When CO5 → F23 - 1 Direction 'Output'

System 4.2

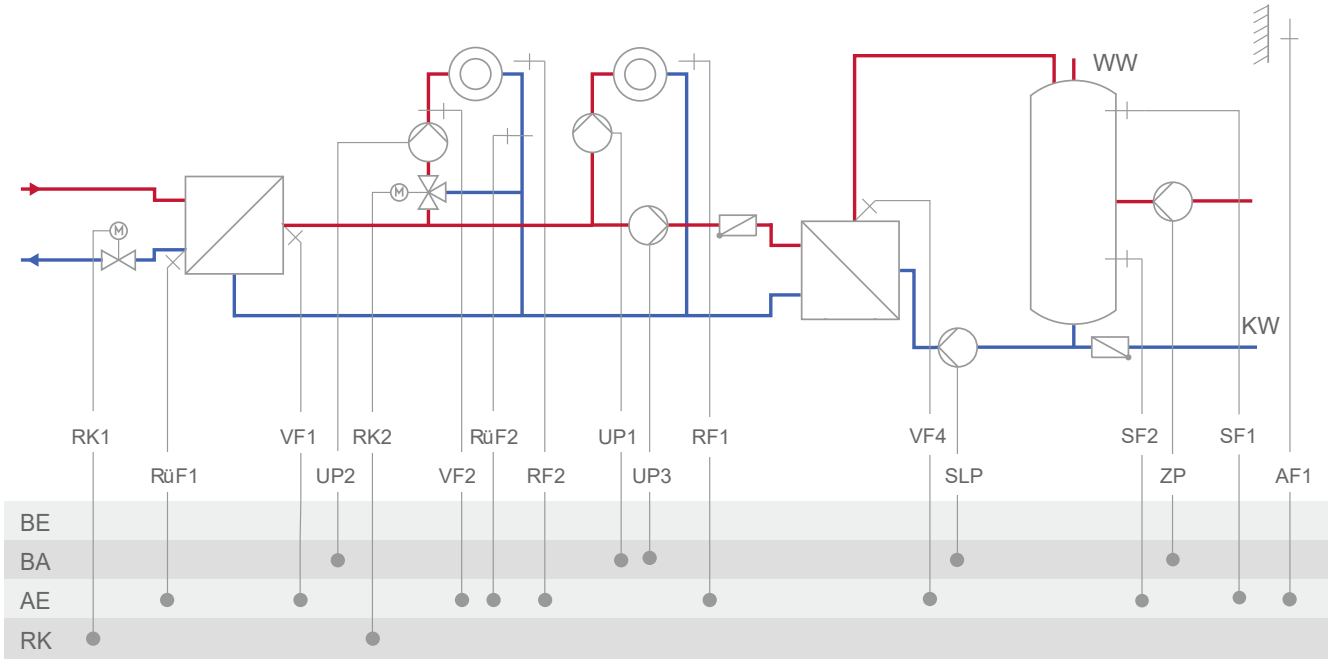

System	4.2
	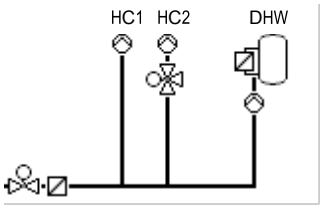
Default setting	
CO1 → F01	- 0 (without RF1)
CO1 → F02	- 1 (with AF1)
CO1 → F03	- 1 (with RüF1)
CO2 → F01	- 0 (without RF2)
CO2 → F02	- 1 (with AF1)
CO2 → F03	- 0 (without RüF2)
CO4 → F01	- 1 (with SF1)
CO4 → F02	- 1 (with SF2)
CO4 → F05	- 0 (without VF4)
CO5 → F07	- 0 (without error message at terminal 46)
CO5 → F34, F35, F36, F37	Function AA1, AA2, AA3, AA4: – Control signal Y1 (RK1) – Control signal Y2 (RK2) – External demand — When CO1 → F18 - 1 – SLP speed — When CO4 → F21 - 1 – ZP speed — When CO4 → F25 - 1 – Outdoor temperature — When CO5 → F23 - 1 Direction 'Output'

System 4.3

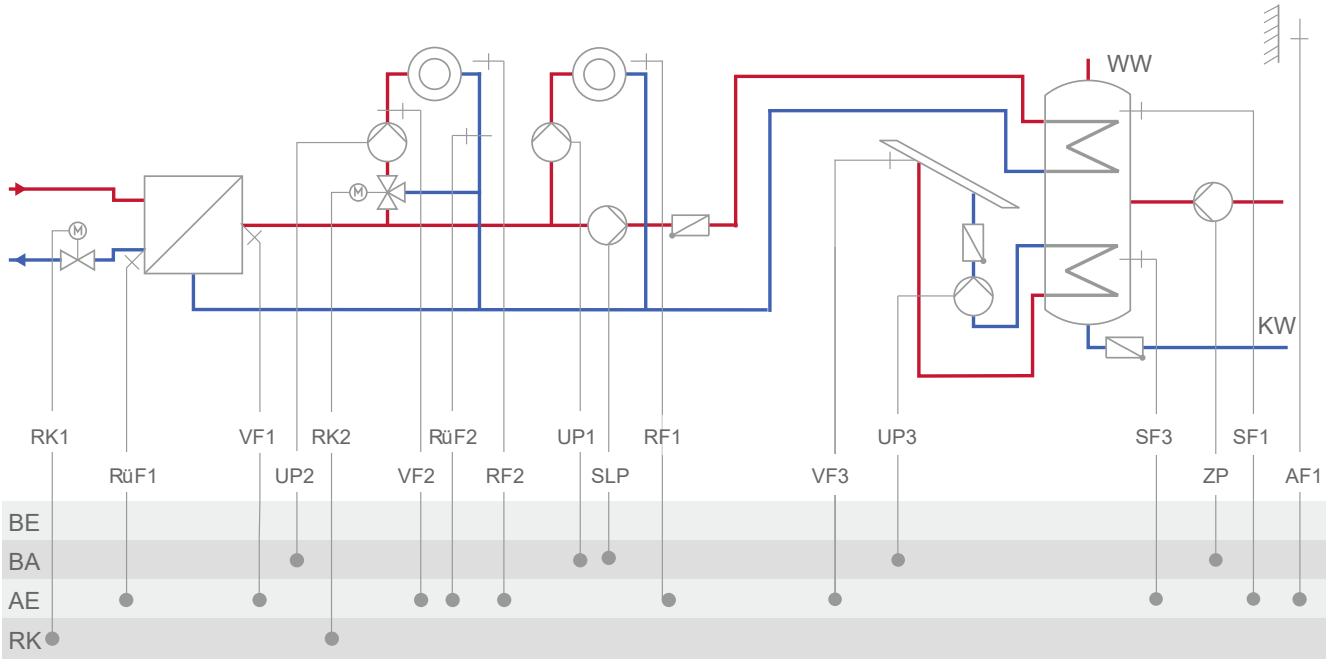

System	4.3
	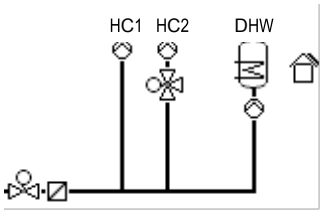
Default setting	
CO1 → F01	- 0 (without RF1)
CO1 → F02	- 1 (with AF1)
CO1 → F03	- 1 (with RüF1)
CO2 → F01	- 0 (without RF2)
CO2 → F02	- 1 (with AF1)
CO2 → F03	- 0 (without RüF2)
CO4 → F01	- 1 (with SF1)
CO4 → F02	- 0 (without SF2)
CO5 → F07	- 0 (without error message at terminal 46)
CO5 → F34, F35, F36, F37	Function AA1, AA2, AA3, AA4: – Control signal Y1 (RK1) – Control signal Y2 (RK2) – External demand — When CO1 → F18 - 1 – SLP speed — When CO4 → F21 - 1 – ZP speed — When CO4 → F25 - 1 – Outdoor temperature — When CO5 → F23 - 1 Direction 'Output'

System 4.5

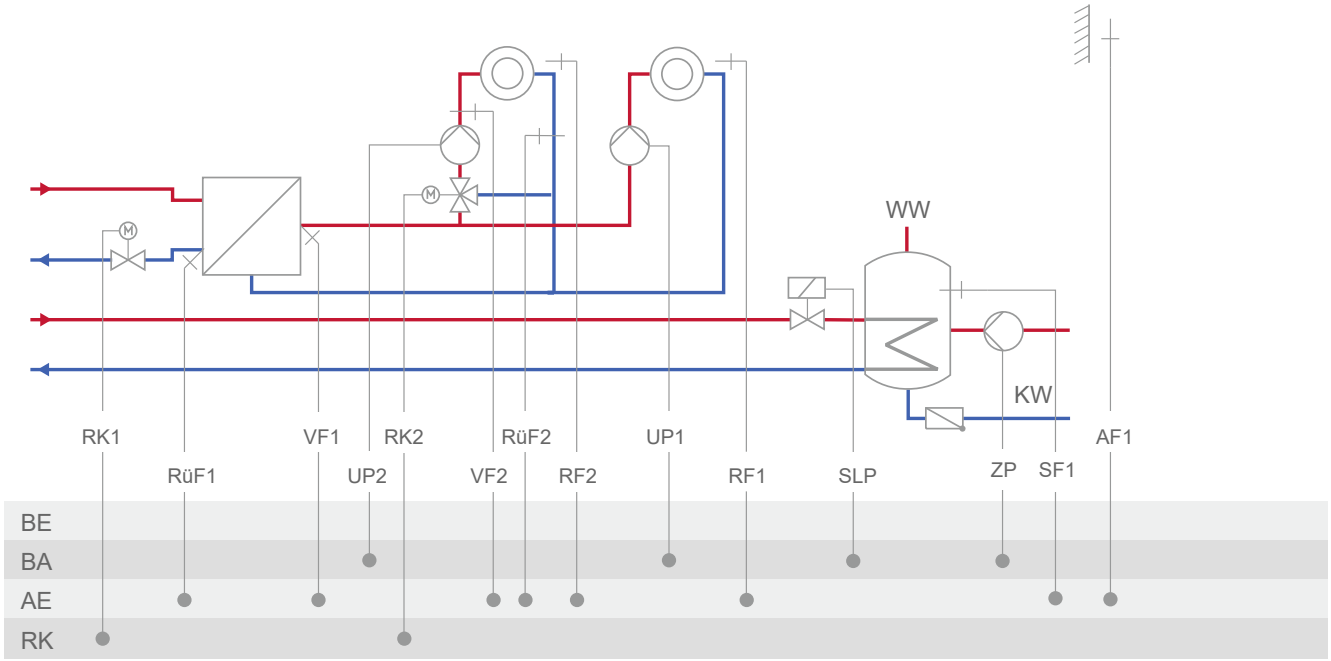

System	4.5
	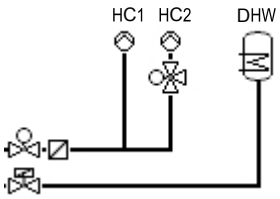
Default setting	
CO1 → F01	- 0 (without RF1)
CO1 → F02	- 1 (with AF1)
CO1 → F03	- 1 (with RüF1)
CO2 → F01	- 0 (without RF2)
CO2 → F02	- 1 (with AF1)
CO2 → F03	- 0 (without RüF2)
CO4 → F01	- 1 (with SF1)
CO4 → F02	- 0 (without SF2)
CO5 → F07	- 0 (without error message at terminal 46)
CO5 → F34, F35, F36, F37	Function AA1, AA2, AA3, AA4: – Control signal Y1 (RK1) – Control signal Y2 (RK2) – External demand — When CO1 → F18 - 1 – ZP speed — When CO4 → F25 - 1 – Outdoor temperature — When CO5 → F23 - 1 Direction 'Output'

System 5.0

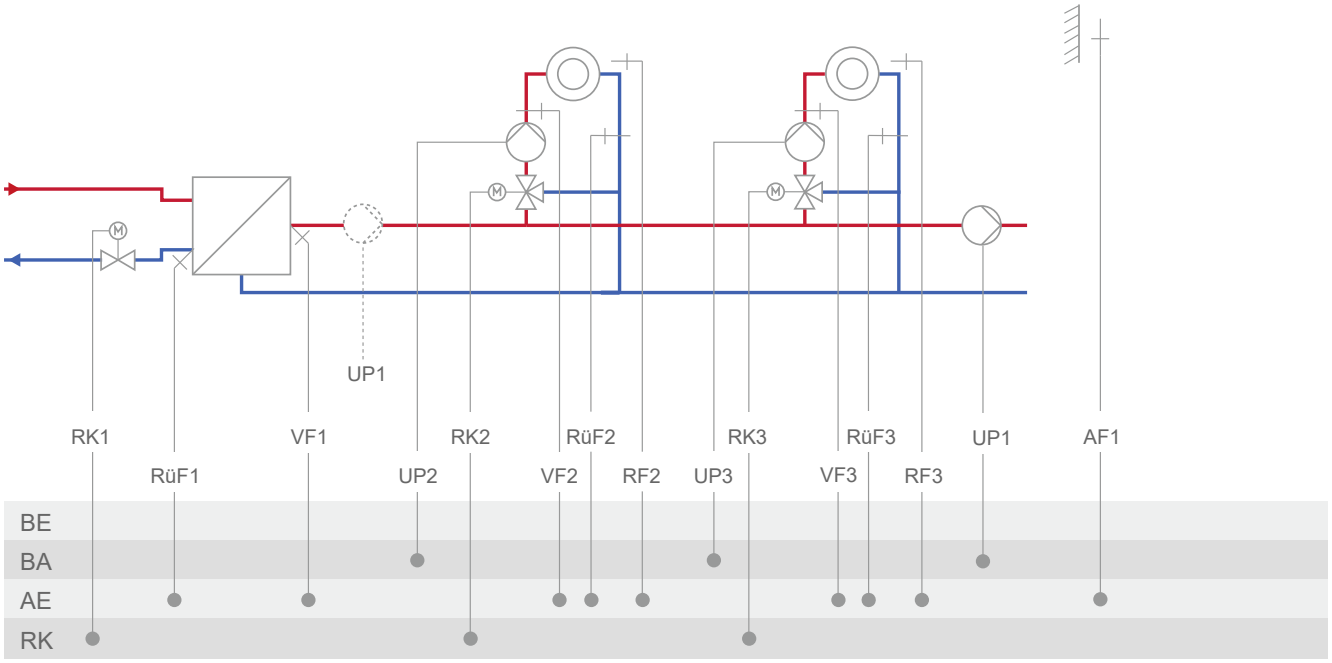
UP1
RK1
RüF1
VF1
UP2
RK2
VF2
RüF2
RF2
UP3
RK3
VF3
RüF3
RF3
UP1
AF1
BE
BA
AE
RK

System	**5.0**
	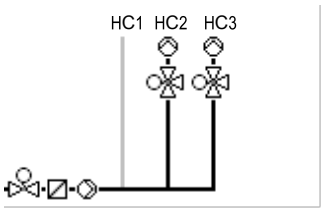
RK2: CO2 → F02 - 0 = Fixed set point control; CO2 → F02 - 1, select AF1 = Outdoor-temperature-compensated control with AF1; CO2→ F02 - 1, select AF2 = Outdoor-temperature-compensated control with AF2 RK3: CO3 → F02 - 0 = Fixed set point control; CO3 → F02 - 1, select AF1 = Outdoor-temperature-compensated control with AF1; CO3→ F02 - 1, select AF2 = Outdoor-temperature-compensated control with AF2	
Default setting	
CO1 → F01	- 0 (without RF1)
CO1 → F02	- 1 (with AF1)
CO1 → F03	- 1 (with RüF1)
CO2 → F01	- 0 (without RF2)
CO2 → F02	- 1 (with AF1)
CO2 → F03	- 0 (without RüF2)
CO3 → F01	- 0 (without RF3)
CO3 → F02	- 1 (with AF1)
CO3 → F03	- 0 (without RüF3)
CO5 → F07	- 0 (without error message at terminal 37)
CO5 → F14	- 0 (UP1 only active during the processing for an external demand)
CO5 → F34, F35, F36, F37	Function AA1, AA2, AA3, AA4: – Control signal Y1 (RK1) – Control signal Y2 (RK2) – Control signal Y3 (RK3) – External demand — When CO1 → F18 - 1 – Outdoor temperature — When CO5 → F23 - 1 Direction 'Output'

System 5.1

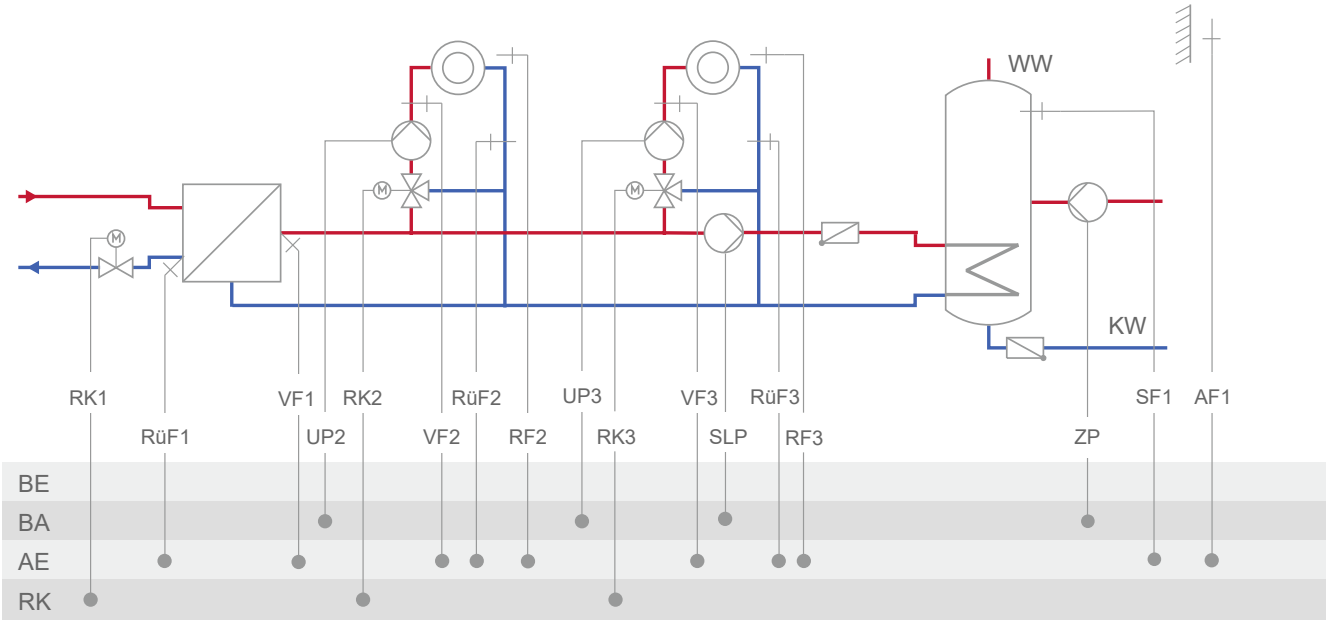
WW
KW
RK1
RüF1
VF1
UP2
RK2
VF2
RüF2
RF2
UP3
RK3
VF3
SLP
RüF3
RF3
ZP
SF1
AF1
BE
BA
AE
RK

System	**5.1**
	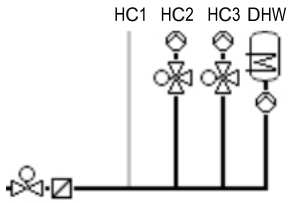
RK2: CO2 → F02 - 0 = Fixed set point control; CO2 → F02 - 1, select AF1 = Outdoor-temperature-compensated control with AF1; CO2→ F02 - 1, select AF2 = Outdoor-temperature-compensated control with AF2 RK3: CO3 → F02 - 0 = Fixed set point control; CO3 → F02 - 1, select AF1 = Outdoor-temperature-compensated control with AF1; CO3→ F02 - 1, select AF2 = Outdoor-temperature-compensated control with AF2	
Default setting	
CO1 → F01	- 0 (without RF1)
CO1 → F02	- 1 (with AF1)
CO1 → F03	- 1 (with RüF1)
CO2 → F01	- 0 (without RF2)
CO2 → F02	- 1 (with AF1)
CO2 → F03	- 0 (without RüF2)
CO3 → F01	- 0 (without RF2)
CO3 → F02	- 1 (with AF1)
CO3 → F03	- 0 (without RüF2)
CO4 → F01	- 1 (with SF1)
CO4 → F02	- 0 (without SF2)
CO5 → F34, F35, F36, F37	Function AA1, AA2, AA3, AA4: – Control signal Y1 (RK1) – Control signal Y2 (RK2) – Control signal Y3 (RK3) – External demand — When CO1 → F18 - 1 – SLP speed — When CO4 → F21 - 1 – ZP speed — When CO4 → F25 - 1 – Outdoor temperature — When CO5 → F23 - 1 Direction 'Output'

System 5.2

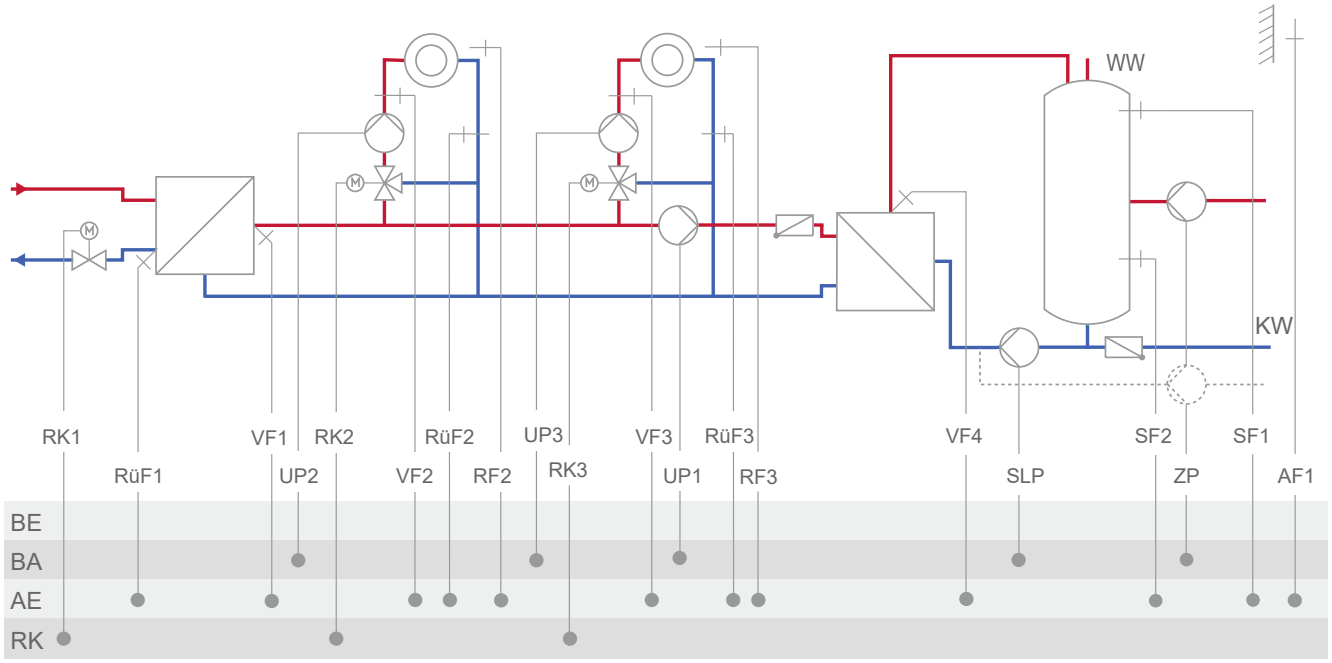
WW
KW
RK1
RüF1
VF1
UP2
RK2
VF2
RüF2
RF2
UP3
RK3
VF3
UP1
RüF3
RF3
VF4
SLP
SF2
ZP
SF1
AF1
BE
BA
AE
RK

System	**5.2**
	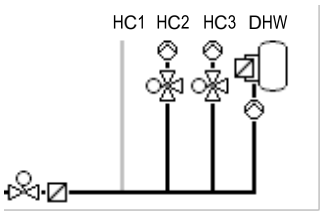
RK2: CO2 → F02 - 0 = Fixed set point control; CO2 → F02 - 1, select AF1 = Outdoor-temperature-compensated control with AF1; CO2→ F02 - 1, select AF2 = Outdoor-temperature-compensated control with AF2 RK3: CO3 → F02 - 0 = Fixed set point control; CO3 → F02 - 1, select AF1 = Outdoor-temperature-compensated control with AF1; CO3→ F02 - 1, select AF2 = Outdoor-temperature-compensated control with AF2	
Default setting	
CO1 → F01	- 0 (without RF1)
CO1 → F02	- 1 (with AF1)
CO1 → F03	- 1 (with RüF1)
CO2 → F01	- 0 (without RF2)
CO2 → F02	- 1 (with AF1)
CO2 → F03	- 0 (without RüF2)
CO3 → F01	- 0 (without RF3)
CO3 → F02	- 1 (with AF1)
CO3 → F03	- 0 (without RüF3)
CO4 → F01	- 1 (with SF1)
CO4 → F02	- 1 (with SF2)
CO4 → F05	- 0 (without VF4)
CO4 → F10	- 0 (DHW circulation return in storage tank)
CO5 → F34, F35, F36, F37	Function AA1, AA2, AA3, AA4: – Control signal Y1 (RK1) – Control signal Y2 (RK2) – Control signal Y3 (RK3) – External demand — When CO1 → F18 - 1 – SLP speed — When CO4 → F21 - 1 – ZP speed — When CO4 → F25 - 1 – Outdoor temperature — When CO5 → F23 - 1 Direction 'Output'

System 5.9

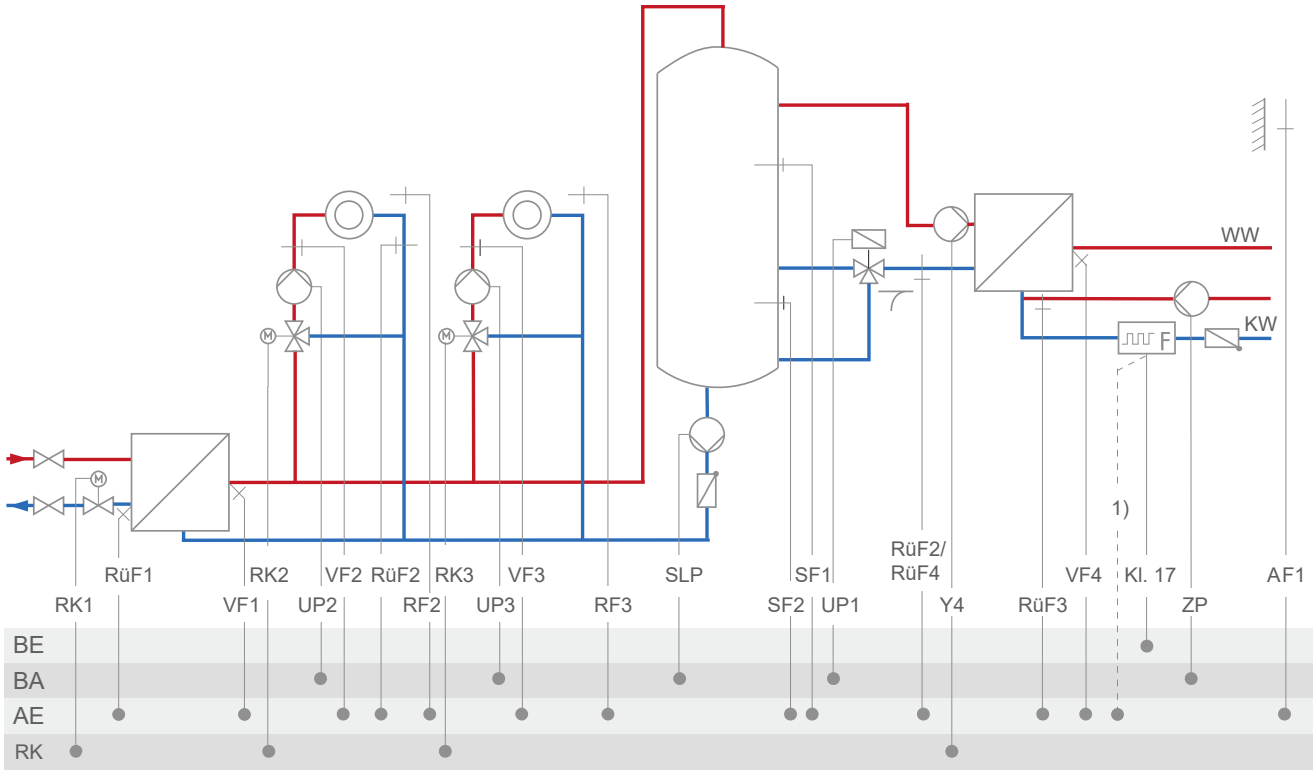

1) bei Vortex-Sensor Kl. 15, 16 oder 17

System	**5.9**
	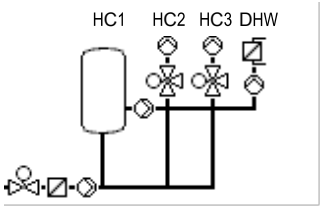
RK2: CO2 → F02 - 0 = Fixed set point control; CO2 → F02 - 1, select AF1 = Outdoor-temperature-compensated control with AF1; CO2→ F02 - 1, select AF2 = Outdoor-temperature-compensated control with AF2 RK3: CO3 → F02 - 0 = Fixed set point control; CO3 → F02 - 1, select AF1 = Outdoor-temperature-compensated control with AF1; CO3→ F02 - 1, select AF2 = Outdoor-temperature-compensated control with AF2	
Default setting	
CO1 → F02	- 1 (with AF1)
CO1 → F03	- 1 (with RüF1)
CO1 → F06	- 1 (with SF2)
CO2 → F01	- 0 (without RF2)
CO2 → F02	- 1 (with AF1)
CO2 → F03	- 0 (without RüF2 in RK2)
CO3 → F01	- 0 (without RF3)
CO3 → F02	- 1 (with AF1)
CO4 → F03	- 0 (without RüF2/RüF4)
CO4 → F04	- 0 (without flow switch)
CO4 → F14	- 0 (without RüF3)
CO5 → F34, F35, F36, F37	Function AA1, AA2, AA3, AA4: – Control signal Y1 (RK1) – Control signal Y2 (RK2) – Control signal Y3 (RK3) – Control signal Y4 – 5 V supply – 10 V supply – External demand — When CO1 → F18 - 1 – SLP speed — When CO4 → F21 - 1 – ZP speed — When CO4 → F25 - 1 – Outdoor temperature — When CO5 → F23 - 1 Direction 'Output'

System 6.0

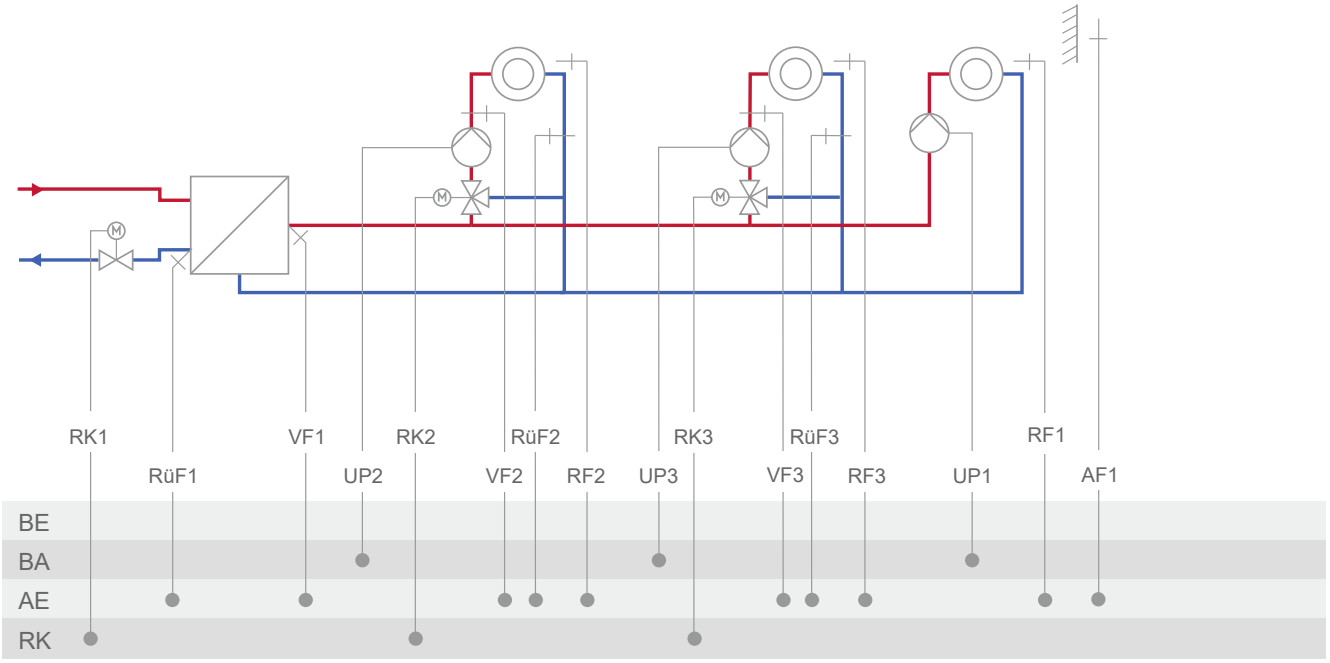

System	6.0
	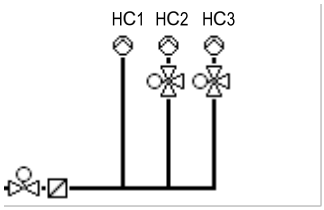
RK2: CO2 → F02 - 0 = Fixed set point control; CO2 → F02 - 1, select AF1 = Outdoor-temperature-compensated control with AF1; CO2→ F02 - 1, select AF2 = Outdoor-temperature-compensated control with AF2 RK3: CO3 → F02 - 0 = Fixed set point control; CO3 → F02 - 1, select AF1 = Outdoor-temperature-compensated control with AF1; CO3→ F02 - 1, select AF2 = Outdoor-temperature-compensated control with AF2	
Default setting	
CO1 → F01	- 0 (without RF1)
CO1 → F02	- 1 (with AF1)
CO1 → F03	- 1 (with RüF1)
CO2 → F01	- 0 (without RF2)
CO2 → F02	- 1 (with AF1)
CO2 → F03	- 0 (without RüF2)
CO3 → F01	- 0 (without RF3)
CO3 → F02	- 1 (with AF1)
CO3 → F03	- 0 (without RüF3)
CO5 → F07	- 0 (without error message at terminal 37)
CO5 → F34, F35, F36, F37	Function AA1, AA2, AA3, AA4: – Control signal Y1 (RK1) – Control signal Y2 (RK2) – Control signal Y3 (RK3) – External demand — When CO1 → F18 - 1 – Outdoor temperature — When CO5 → F23 - 1 Direction 'Output'

System 6.1

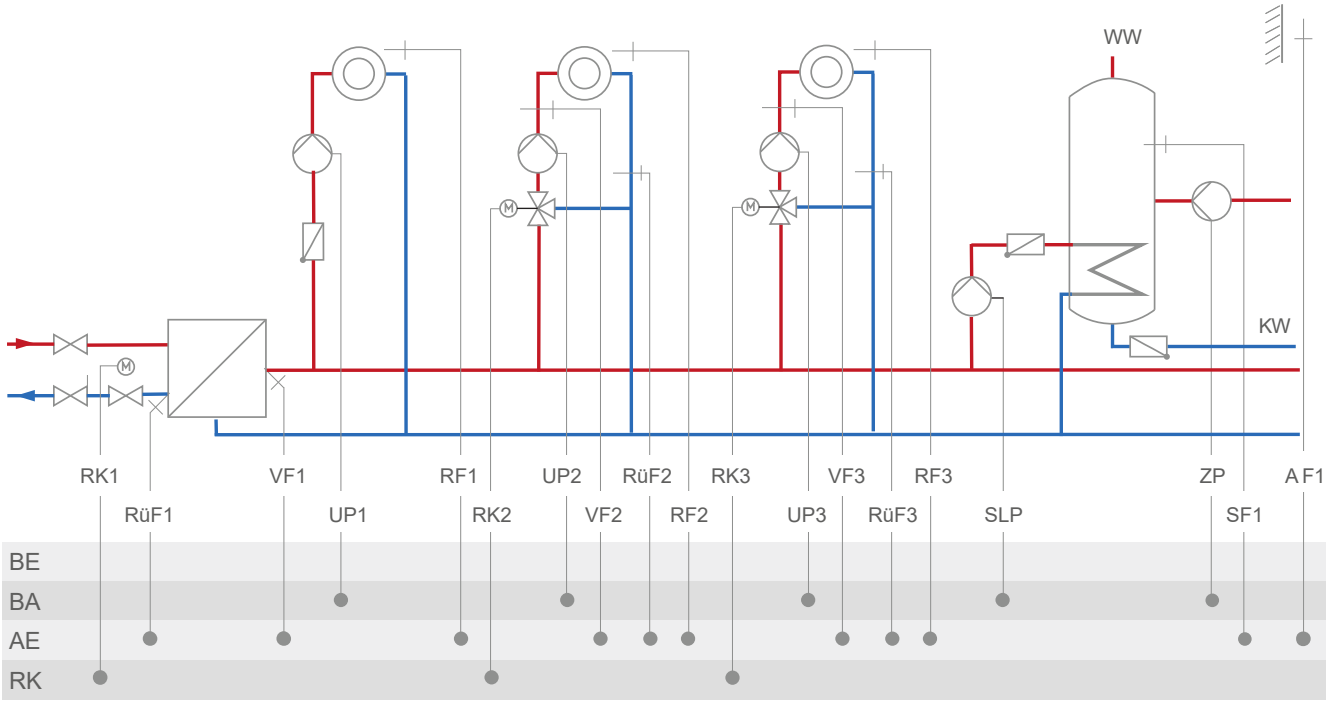
WW
KW
RK1
RüF1
VF1
UP1
RF1
RK2
UP2
VF2
RüF2
RF2
RK3
UP3
VF3
RüF3
RF3
SLP
ZP
SF1
A F1
BE
BA
AE
RK

System	6.1
	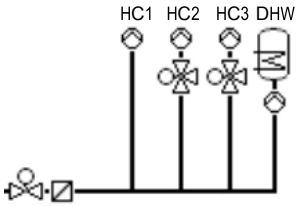
RK2: CO2 → F02 - 0 = Fixed set point control; CO2 → F02 - 1, select AF1 = Outdoor-temperature-compensated control with AF1; CO2→ F02 - 1, select AF2 = Outdoor-temperature-compensated control with AF2 RK3: CO3 → F02 - 0 = Fixed set point control; CO3 → F02 - 1, select AF1 = Outdoor-temperature-compensated control with AF1; CO3→ F02 - 1, select AF2 = Outdoor-temperature-compensated control with AF2	
Default setting	
CO1 → F01	- 0 (without RF1)
CO1 → F02	- 1 (with AF1)
CO1 → F03	- 1 (with RüF1)
CO2 → F01	- 0 (without RF2)
CO2 → F02	- 1 (with AF1)
CO2 → F03	- 0 (without RüF2)
CO3 → F01	- 0 (without RF3)
CO3 → F02	- 1 (with AF1)
CO3 → F03	- 0 (without RüF3)
CO4 → F01	- 1 (with SF1)
CO4 → F02	- 0 (without SF2)
CO5 → F34, F35, F36, F37	Function AA1, AA2, AA3, AA4: – Control signal Y1 (RK1) – Control signal Y2 (RK2) – Control signal Y3 (RK3) – External demand — When CO1 → F18 - 1 – SLP speed — When CO4 → F21 - 1 – ZP speed — When CO4 → F25 - 1 – Outdoor temperature — When CO5 → F23 - 1 Direction 'Output'

System 7.1

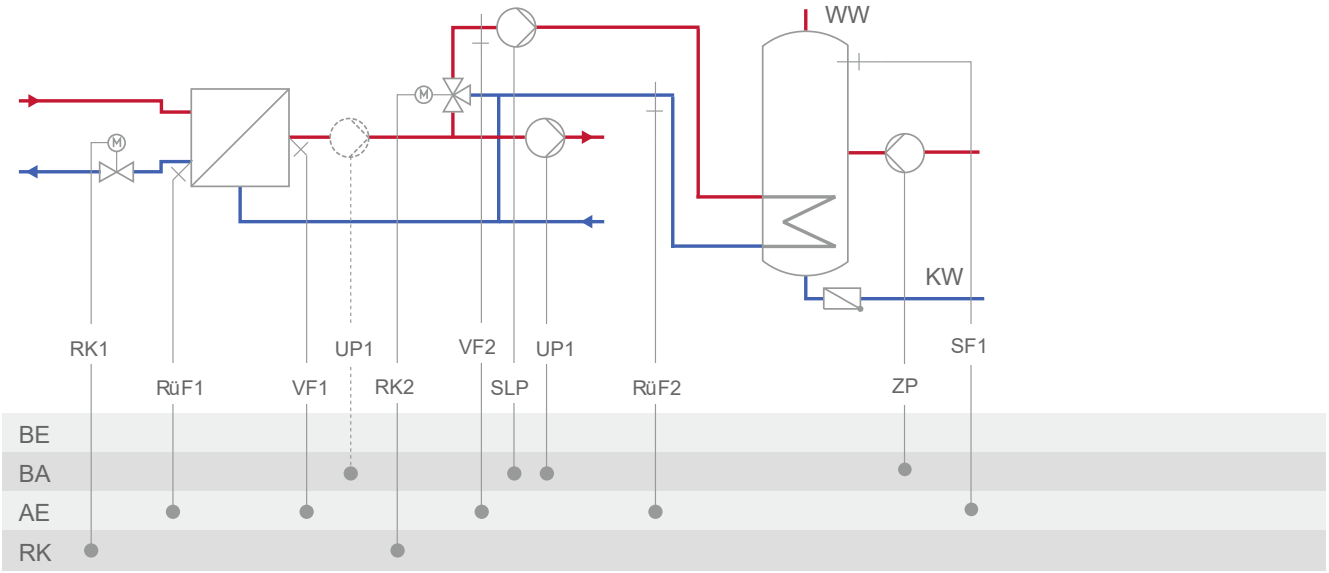

System	7.1
	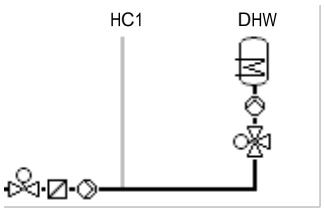
Default setting	
CO1 → F01	- 0 (without RF1)
CO1 → F02	- 0 (without AF1)
CO1 → F03	- 1 (with RüF1)
CO4 → F01	- 1 (with SF1)
CO4 → F02	- 0 (without SF2)
CO4 → F03	- 0 (without RüF2)
CO5 → F07	- 0 (without error message at terminal 46)
CO5 → F14	- 0 (UP1 only active during the processing for an external demand)
CO5 → F34, F35, F36, F37	Function AA1, AA2, AA3, AA4: – Control signal Y1 (RK1) – Control signal Y2 (RK2) – External demand — When CO1 → F18 - 1 – SLP speed — When CO4 → F21 - 1 – ZP speed — When CO4 → F25 - 1

System 7.2

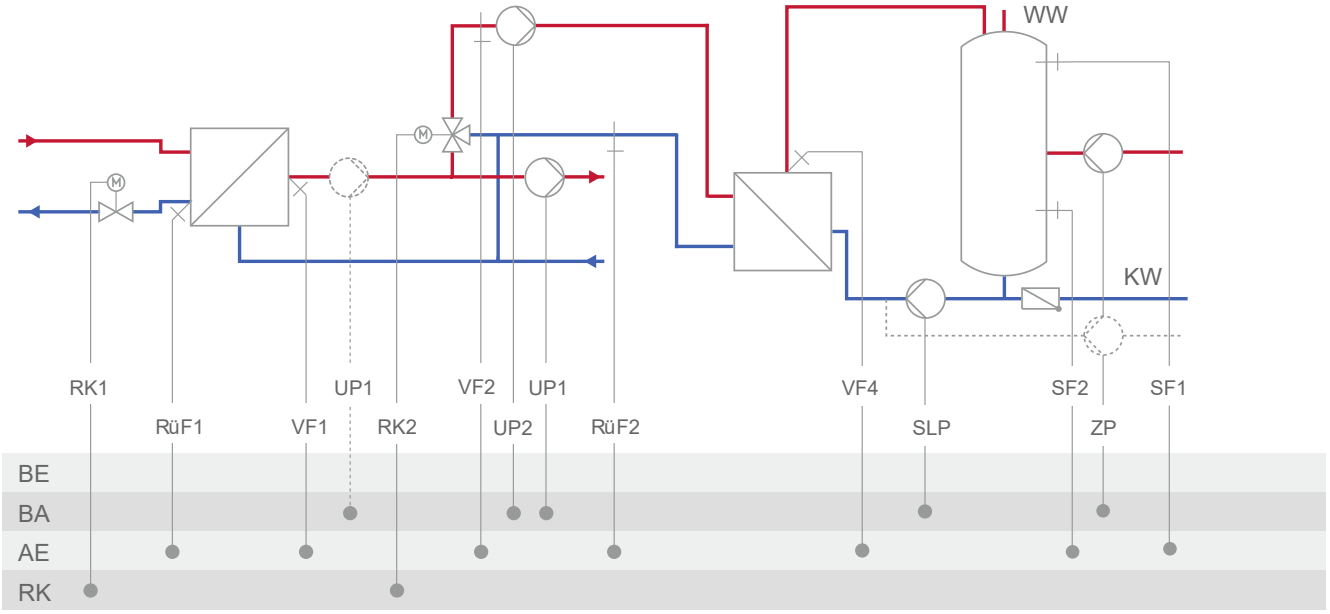

System	7.2
	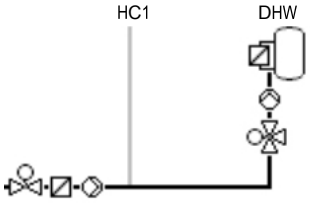
Default setting	
CO1 → F01	- 0 (without RF1)
CO1 → F02	- 0 (without AF1)
CO1 → F03	- 1 (with RüF1)
CO4 → F01	- 1 (with SF1)
CO4 → F02	- 1 (with SF2)
CO4 → F03	- 0 (without RüF2)
CO4 → F05	- 0 (without VF4; in this case, VF2 usually installed at the point of measurement of VF4)
CO4 → F10	- 0 (DHW circulation return in storage tank)
CO5 → F07	- 0 (without error message at terminal 46)
CO5 → F14	- 0 (UP1 only active during the processing for an external demand)
CO5 → F34, F35, F36, F37	Function AA1, AA2, AA3, AA4: – Control signal Y1 (RK1) – Control signal Y2 (RK2) – External demand — When CO1 → F18 - 1 – SLP speed — When CO4 → F21 - 1 – ZP speed — When CO4 → F25 - 1

System 8.1

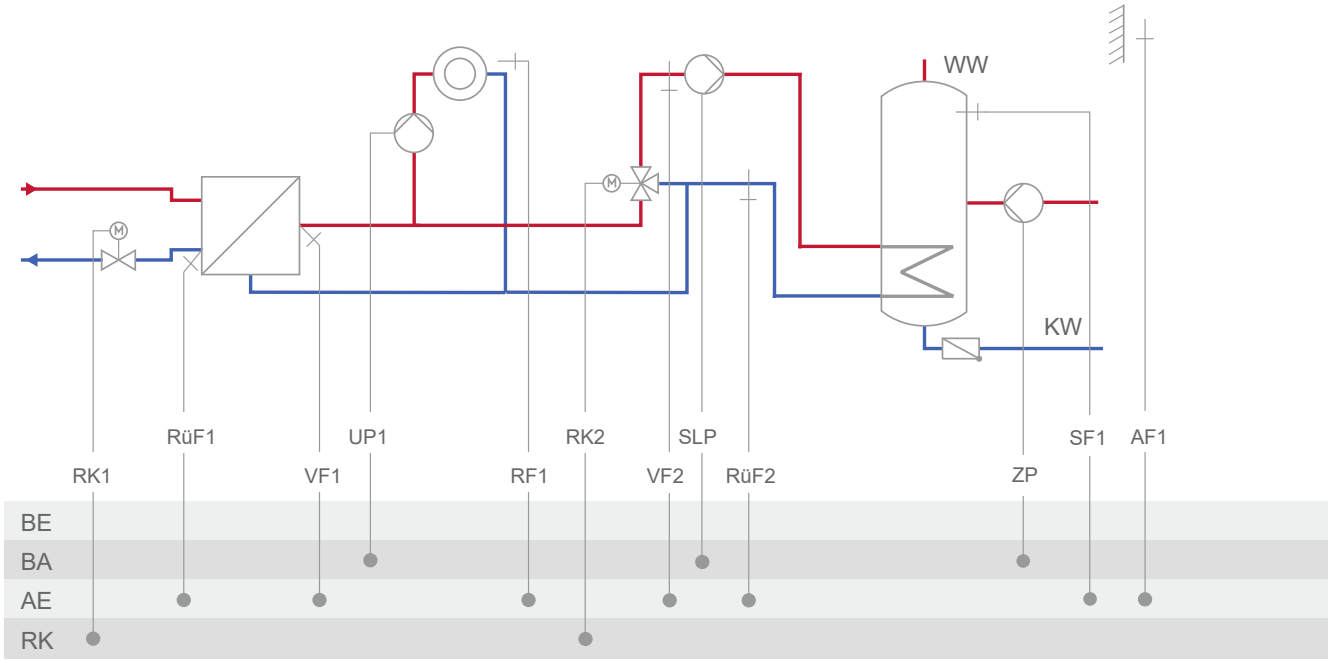

System	8.1
	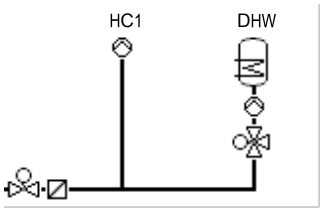
Default setting	
CO1 → F01	- 0 (without RF1)
CO1 → F02	- 1 (with AF1)
CO1 → F03	- 1 (with RüF1)
CO4 → F01	- 1 (with SF1)
CO4 → F02	- 0 (without SF2)
CO4 → F03	- 0 (without RüF2)
CO5 → F07	- 0 (without error message at terminal 46)
CO5 → F34, F35, F36, F37	Function AA1, AA2, AA3, AA4: – Control signal Y1 (RK1) – Control signal Y2 (RK2) – External demand — When CO1 → F18 - 1 – SLP speed — When CO4 → F21 - 1 – ZP speed — When CO4 → F25 - 1 – Outdoor temperature — When CO5 → F23 - 1 Direction 'Output'

System 8.2

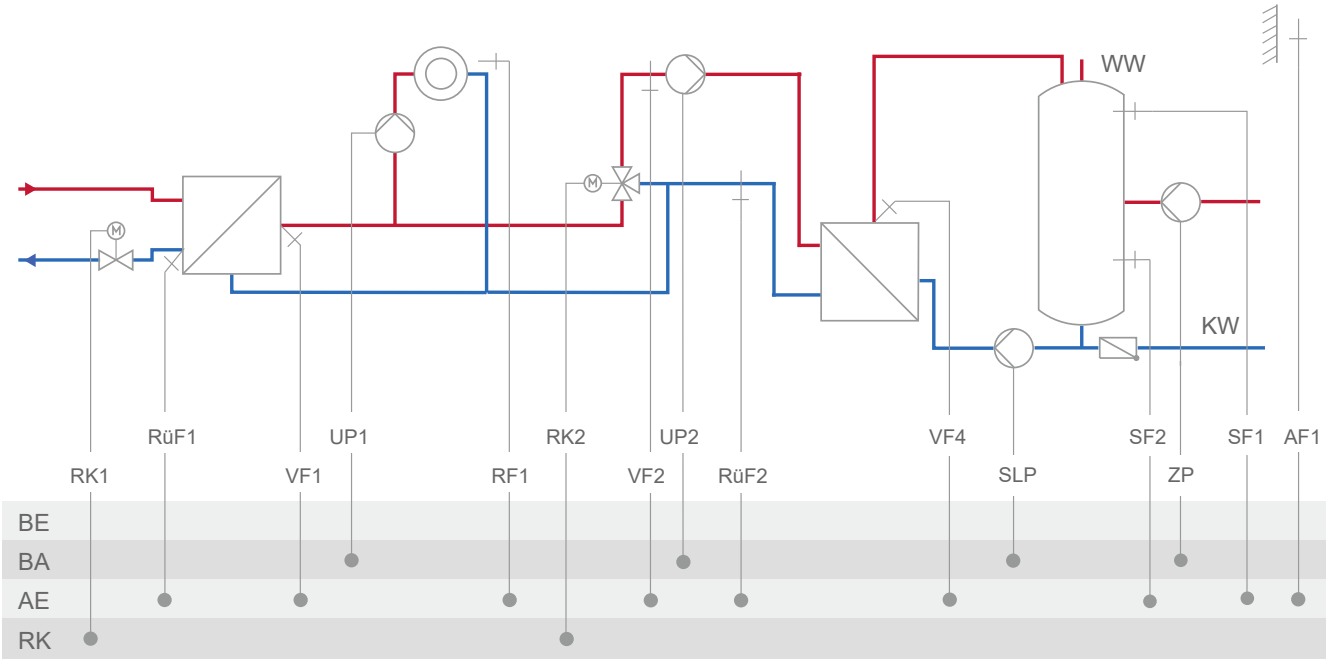

System	8.2
	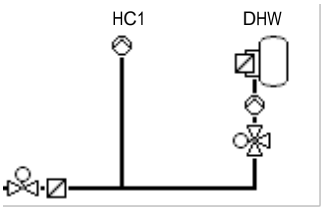
Default setting	
CO1 → F01	- 0 (without RF1)
CO1 → F02	- 1 (with AF1)
CO1 → F03	- 1 (with RüF1)
CO4 → F01	- 1 (with SF1)
CO4 → F02	- 1 (with SF2)
CO4 → F03	- 0 (without RüF2)
CO4 → F05	- 0 (without VF4; in this case, VF2 usually installed at the point of measurement of VF4)
CO5 → F07	- 0 (without error message at terminal 46)
CO5 → F34, F35, F36, F37	Function AA1, AA2, AA3, AA4: – Control signal Y1 (RK1) – Control signal Y2 (RK2) – External demand — When CO1 → F18 - 1 – SLP speed — When CO4 → F21 - 1 – ZP speed — When CO4 → F25 - 1 – Outdoor temperature — When CO5 → F23 - 1 Direction 'Output'

System 9.1

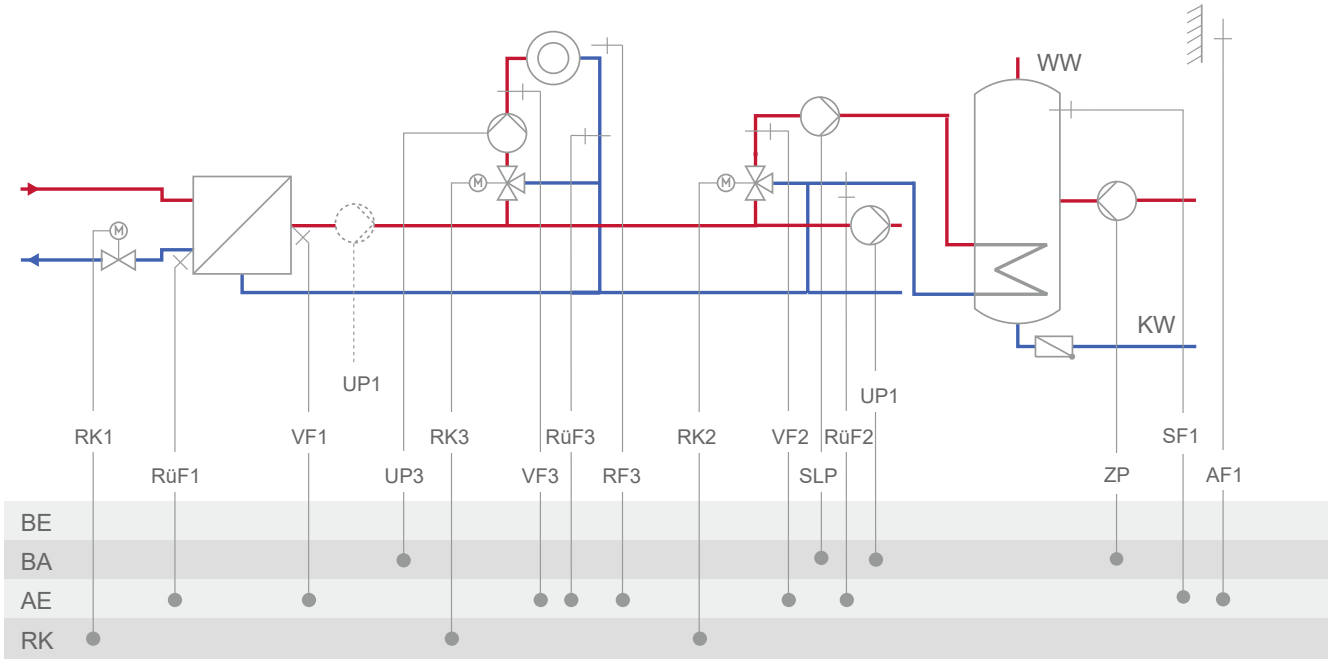

System	9.1
	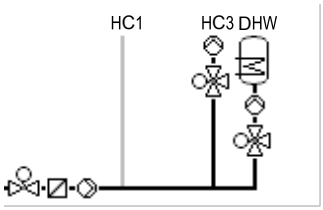
RK3: CO3 → F02 - 0 = Fixed set point control; CO3 → F02 - 1, select AF1 = Outdoor-temperature-compensated control with AF1; CO3→ F02 - 1, select AF2 = Outdoor-temperature-compensated control with AF2	
Default setting	
CO1 → F01	- 0 (without RF1)
CO1 → F02	- 1 (with AF1)
CO1 → F03	- 1 (with RüF1)
CO3 → F01	- 0 (without RF3)
CO3 → F02	- 1 (with AF1)
CO3 → F03	- 0 (without RüF3)
CO4 → F01	- 1 (with SF1)
CO4 → F02	- 0 (without SF2)
CO4 → F03	- 0 (without RüF2)
CO5 → F14	- 0 (UP1 only active during the processing for an external demand)
CO5 → F34, F35, F36, F37	Function AA1, AA2, AA3, AA4: – Control signal Y1 (RK1) – Control signal Y2 (RK2) – Control signal Y3 (RK3) – External demand — When CO1 → F18 - 1 – SLP speed — When CO4 → F21 - 1 – ZP speed — When CO4 → F25 - 1 – Outdoor temperature — When CO5 → F23 - 1 Direction 'Output'

System 9.2

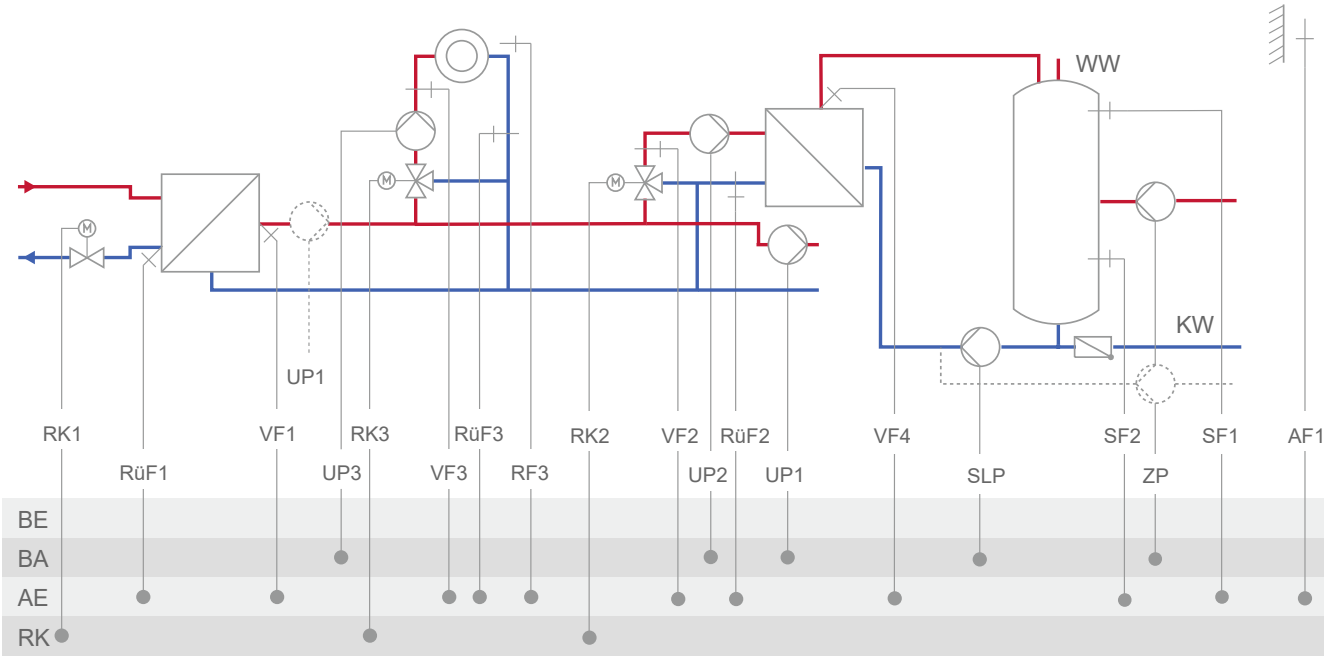
WW
KW
UP1
RK1
RüF1
VF1
UP3
RK3
VF3
RüF3
RF3
RK2
VF2
UP2
RüF2
UP1
VF4
SLP
SF2
ZP
SF1
AF1
BE
BA
AE
RK

System	**9.2**
	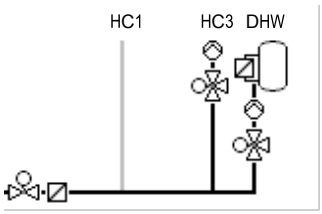
RK3: CO3 → F02 - 0 = Fixed set point control; CO3 → F02 - 1, select AF1 = Outdoor-temperature-compensated control with AF1; CO3→ F02 - 1, select AF2 = Outdoor-temperature-compensated control with AF2	
Default setting	
CO1 → F01	- 0 (without RF1)
CO1 → F02	- 1 (with AF1)
CO1 → F03	- 1 (with RüF1)
CO3 → F01	- 0 (without RF3)
CO3 → F02	- 1 (with AF1)
CO3 → F03	- 0 (without RüF3)
CO4 → F01	- 1 (with SF1)
CO4 → F02	- 1 (with SF2)
CO4 → F03	- 0 (without RüF2)
CO4 → F05	- 0 (without VF4; in this case, VF2 usually installed at the point of measurement of VF4)
CO4 → F10	- 0 (DHW circulation return in storage tank)
CO5 → F14	- 0 (UP1 only active during the processing for an external demand)
CO5 → F34, F35, F36, F37	Function AA1, AA2, AA3, AA4: – Control signal Y1 (RK1) – Control signal Y2 (RK2) – Control signal Y3 (RK3) – External demand — When CO1 → F18 - 1 – SLP speed — When CO4 → F21 - 1 – ZP speed — When CO4 → F25 - 1 – Outdoor temperature — When CO5 → F23 - 1 Direction 'Output'

System 9.5

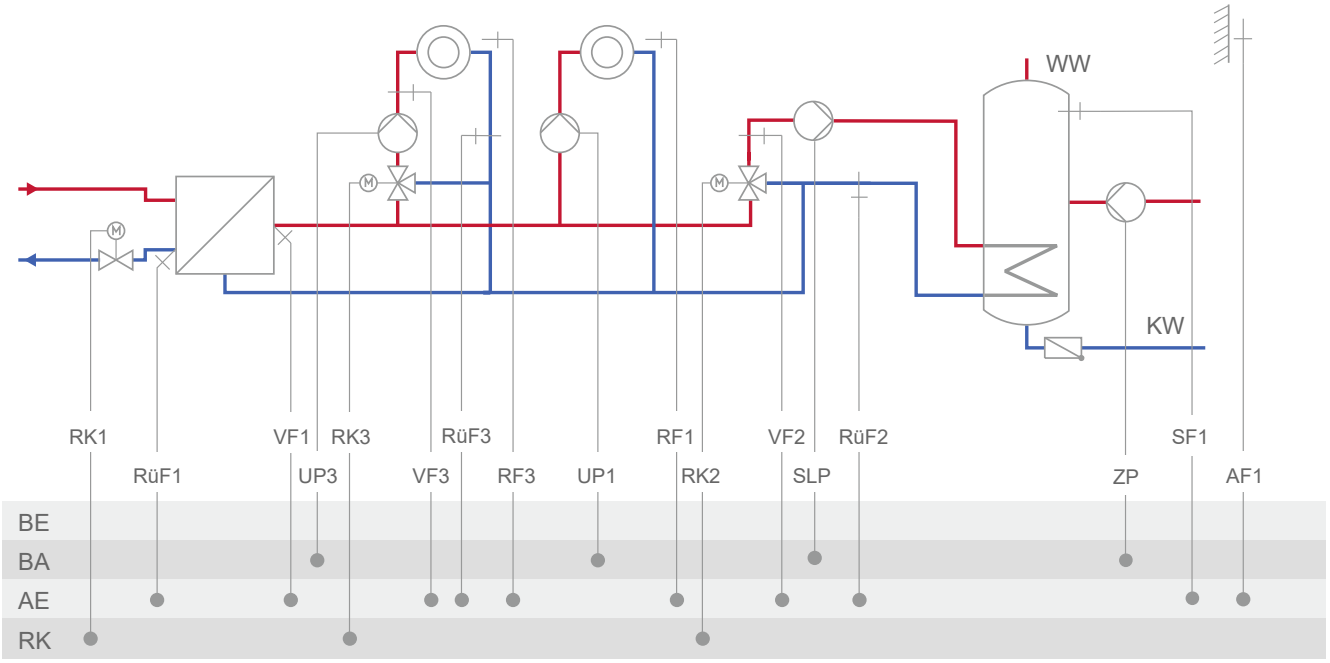

System	9.5
	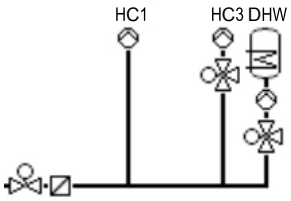
RK3: CO3 → F02 - 0 = Fixed set point control; CO3 → F02 - 1, select AF1 = Outdoor-temperature-compensated control with AF1; CO3→ F02 - 1, select AF2 = Outdoor-temperature-compensated control with AF2	
Default setting	
CO1 → F01	- 0 (without RF1)
CO1 → F02	- 1 (with AF1)
CO1 → F03	- 1 (with RüF1)
CO3 → F01	- 0 (without RF3)
CO3 → F02	- 1 (with AF1)
CO3 → F03	- 0 (without RüF3)
CO4 → F01	- 1 (with SF1)
CO4 → F02	- 0 (without SF2)
CO4 → F03	- 0 (without RüF2)
CO5 → F34, F35, F36, F37	Function AA1, AA2, AA3, AA4: – Control signal Y1 (RK1) – Control signal Y2 (RK2) – Control signal Y3 (RK3) – External demand — When CO1 → F18 - 1 – SLP speed — When CO4 → F21 - 1 – ZP speed — When CO4 → F25 - 1 – Outdoor temperature — When CO5 → F23 - 1 Direction 'Output'

System 9.6

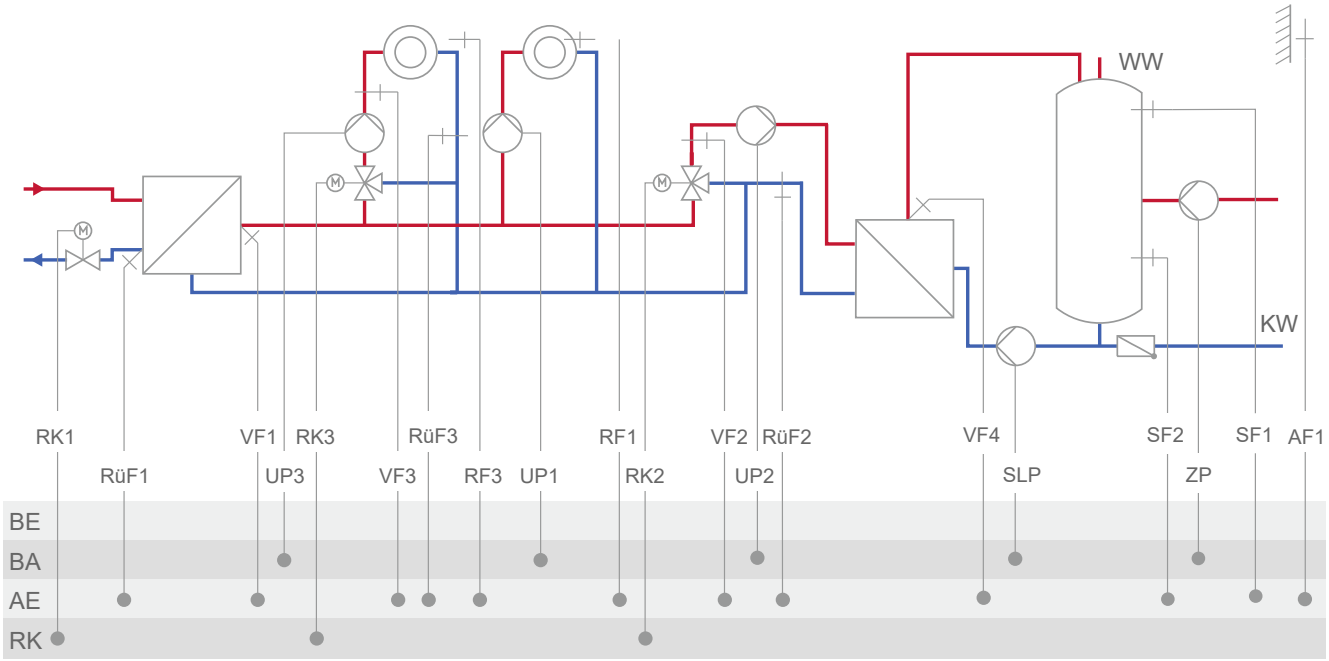
WW
KW
RK1
RüF1
VF1
UP3
RK3
VF3
RüF3
RF3
UP1
RF1
RK2
VF2
UP2
RüF2
VF4
SLP
SF2
ZP
SF1
AF1
BE
BA
AE
RK

System	**9.6**
	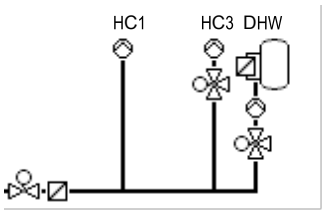
RK3: CO3 → F02 - 0 = Fixed set point control; CO3 → F02 - 1, select AF1 = Outdoor-temperature-compensated control with AF1; CO3→ F02 - 1, select AF2 = Outdoor-temperature-compensated control with AF2	
Default setting	
CO1 → F01	- 0 (without RF1)
CO1 → F02	- 1 (with AF1)
CO1 → F03	- 1 (with RüF1)
CO3 → F01	- 0 (without RF3)
CO3 → F02	- 1 (with AF1)
CO3 → F03	- 0 (without RüF3)
CO4 → F01	- 1 (with SF1)
CO4 → F02	- 1 (with SF2)
CO4 → F03	- 0 (without RüF2)
CO4 → F05	- 0 (without VF4; in this case, VF2 usually installed at the point of measurement of VF4)
CO5 → F34, F35, F36, F37	Function AA1, AA2, AA3, AA4: – Control signal Y1 (RK1) – Control signal Y2 (RK2) – Control signal Y3 (RK3) – External demand — When CO1 → F18 - 1 – SLP speed — When CO4 → F21 - 1 – ZP speed — When CO4 → F25 - 1 – Outdoor temperature — When CO5 → F23 - 1 Direction 'Output'

System 10.0-1

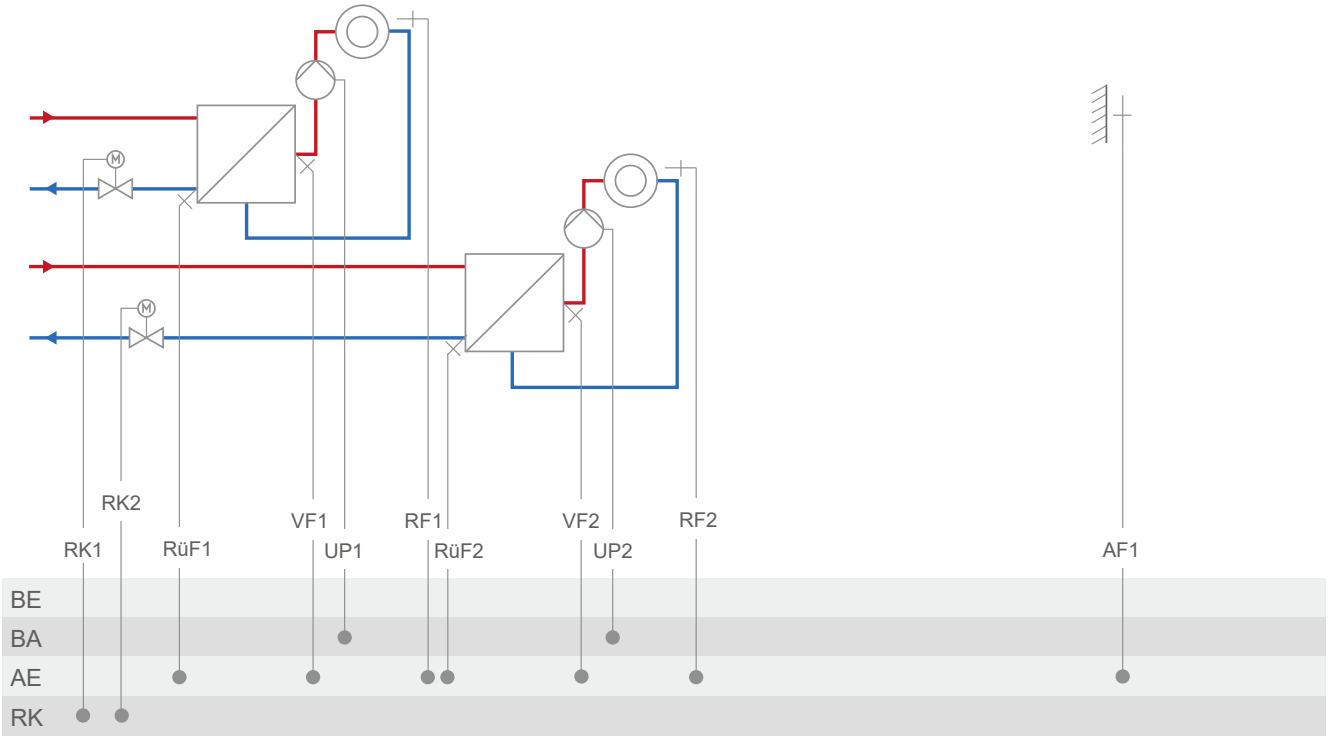

System	10.0-1
	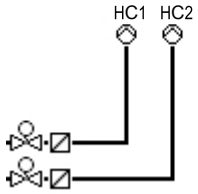
RK2: CO2 → F02 - 0 = Fixed set point control; CO2 → F02 - 1, select AF1 = Outdoor-temperature-compensated control with AF1; CO2→ F02 - 1, select AF2 = Outdoor-temperature-compensated control with AF2	
Default setting	
CO1 → F01	- 0 (without RF1)
CO1 → F02	- 1 (with AF1)
CO1 → F03	- 1 (with RüF1)
CO2 → F01	- 0 (without RF2)
CO2 → F02	- 1 (with AF1)
CO2 → F03	- 1 (with RüF2)
CO5 → F07	- 0 (without error message at terminal 37)
CO5 → F34, F35, F36, F37	Function AA1, AA2, AA3, AA4: – Control signal Y1 (RK1) – Control signal Y2 (RK2) – External demand — When CO1 → F18 - 1 – Outdoor temperature — When CO5 → F23 - 1 Direction 'Output'

System 10.0-2

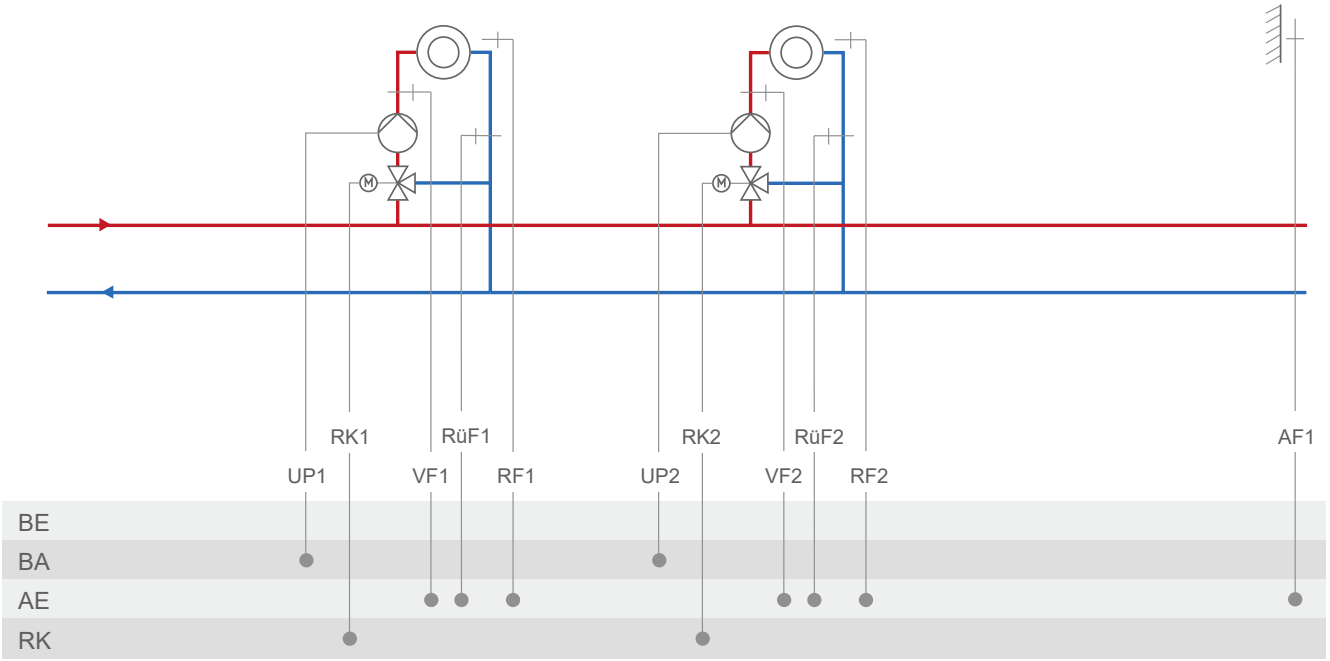

System	10.0-2
	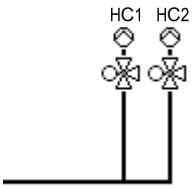
RK2: CO2 → F02 - 0 = Fixed set point control; CO2 → F02 - 1, select AF1 = Outdoor-temperature-compensated control with AF1; CO2→ F02 - 1, select AF2 = Outdoor-temperature-compensated control with AF2	
Default setting	
CO1 → F01	- 0 (without RF1)
CO1 → F02	- 1 (with AF1)
CO1 → F03	- 1 (with RüF1)
CO2 → F01	- 0 (without RF2)
CO2 → F02	- 1 (with AF1)
CO2 → F03	- 1 (with RüF2)
CO5 → F07	- 0 (without error message at terminal 37)
CO5 → F34, F35, F36, F37	Function AA1, AA2, AA3, AA4: – Control signal Y1 (RK1) – Control signal Y2 (RK2) – External demand — When CO1 → F18 - 1 – Outdoor temperature — When CO5 → F23 - 1 Direction 'Output'

System 10.1-1

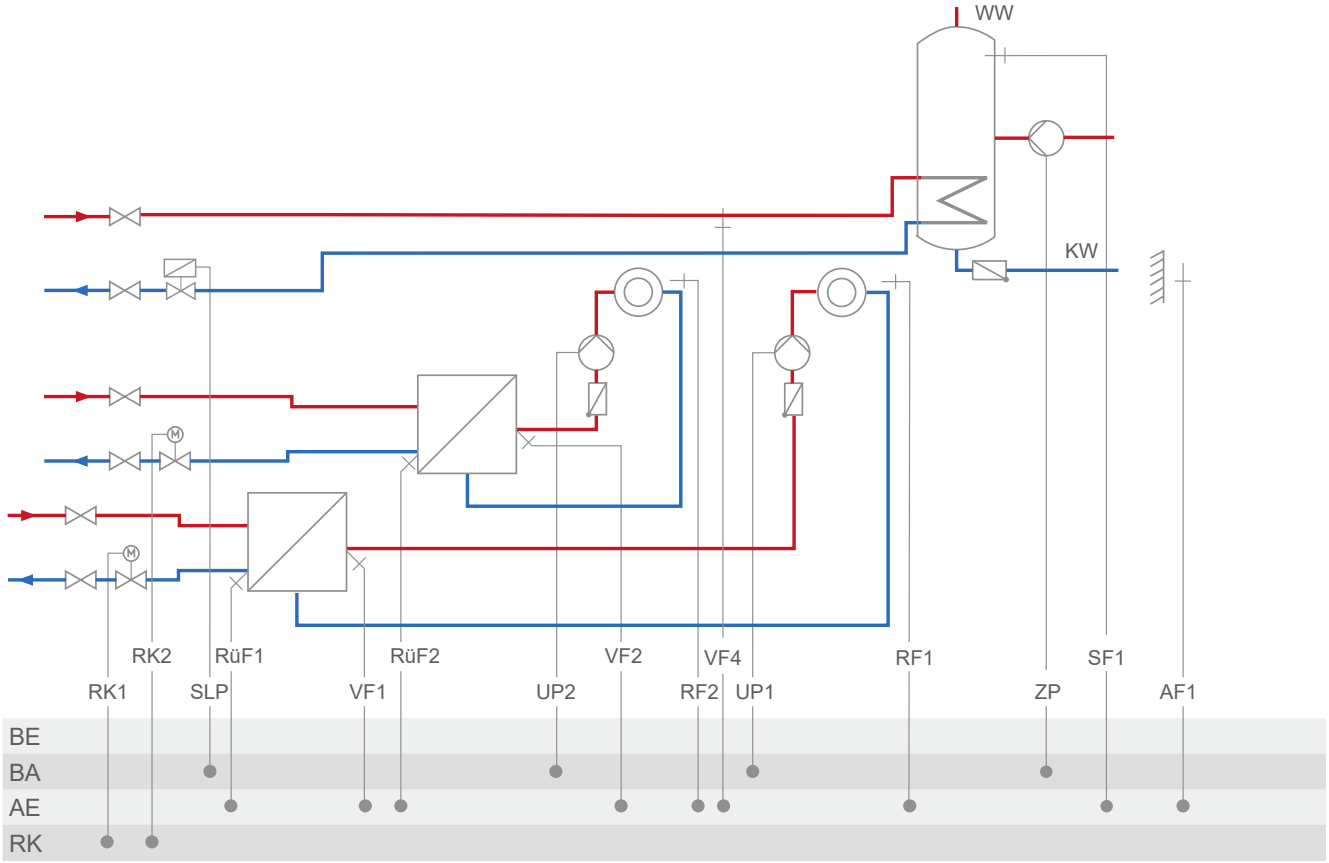
WW
KW
RK1
RK2
SLP
RüF1
VF1
RüF2
UP2
VF2
RF2
VF4
UP1
RF1
ZP
SF1
AF1
BE
BA
AE
RK

System	**10.1-1**
	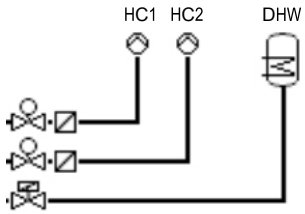
RK2: CO2 → F02 - 0 = Fixed set point control; CO2 → F02 - 1, select AF1 = Outdoor-temperature-compensated control with AF1; CO2→ F02 - 1, select AF2 = Outdoor-temperature-compensated control with AF2	
Default setting	
CO1 → F01	- 0 (without RF1)
CO1 → F02	- 1 (with AF1)
CO1 → F03	- 0 (without RüF1)
CO2 → F01	- 0 (without RF2)
CO2 → F02	- 1 (with AF1)
CO2 → F03	- 0 (without RüF2)
CO4 → F01	- 1 (with SF1)
CO4 → F02	- 0 (without SF2)
CO4 → F05	- 0 (without VF4)
CO5 → F07	- 0 (without error message at terminal 46)
CO5 → F34, F35, F36, F37	Function AA1, AA2, AA3, AA4: – Control signal Y1 (RK1) – Control signal Y2 (RK2) – External demand — When CO1 → F18 - 1 – ZP speed — When CO4 → F25 - 1 – Outdoor temperature — When CO5 → F23 - 1 Direction 'Output'

System 10.1-2

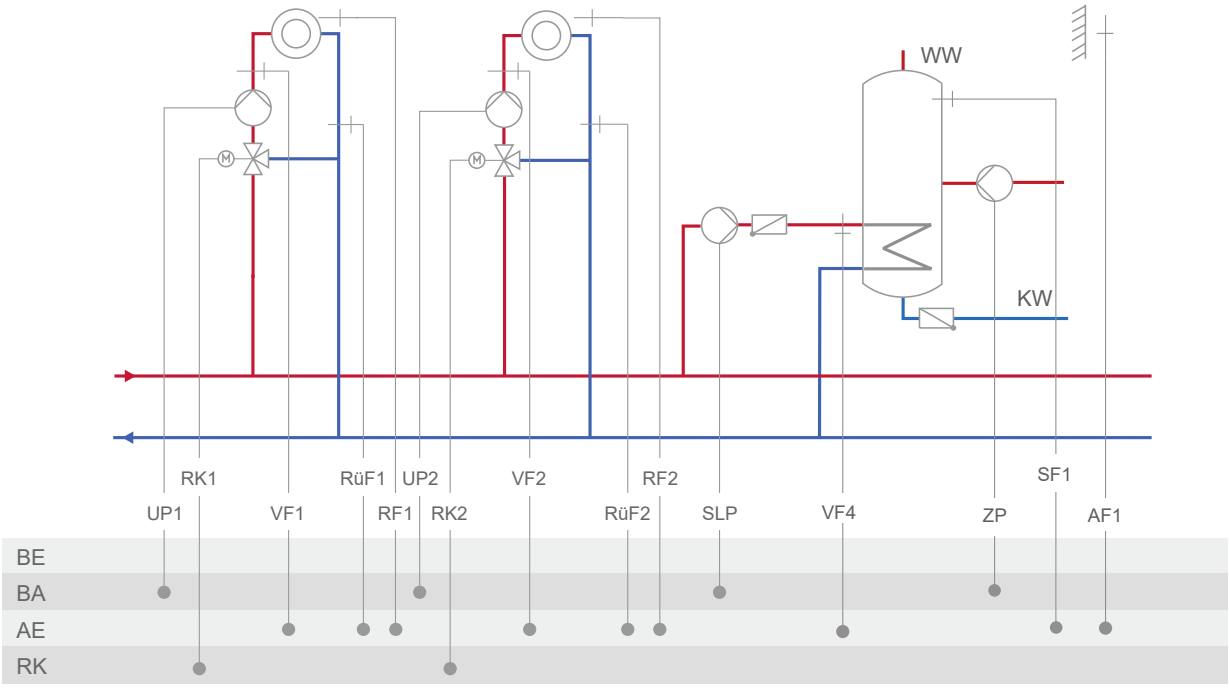

System	10.1-2
	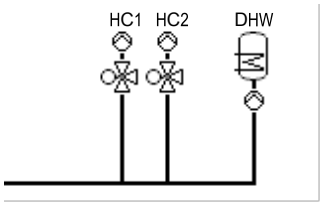
RK2: CO2 → F02 - 0 = Fixed set point control; CO2 → F02 - 1, select AF1 = Outdoor-temperature-compensated control with AF1; CO2→ F02 - 1, select AF2 = Outdoor-temperature-compensated control with AF2	
Default setting	
CO1 → F01	- 0 (without RF1)
CO1 → F02	- 1 (with AF1)
CO1 → F03	- 0 (without RüF1)
CO2 → F01	- 0 (without RF2)
CO2 → F02	- 1 (with AF1)
CO2 → F03	- 0 (without RüF2)
CO4 → F01	- 1 (with SF1)
CO4 → F02	- 0 (without SF2)
CO4 → F05	- 0 (without VF4)
CO5 → F07	- 0 (without error message at terminal 46)
CO5 → F34, F35, F36, F37	Function AA1, AA2, AA3, AA4: – Control signal Y1 (RK1) – Control signal Y2 (RK2) – External demand — When CO1 → F18 - 1 – SLP speed — When CO4 → F21 - 1 – ZP speed — When CO4 → F25 - 1 – Outdoor temperature — When CO5 → F23 - 1 Direction 'Output'

System 10.2

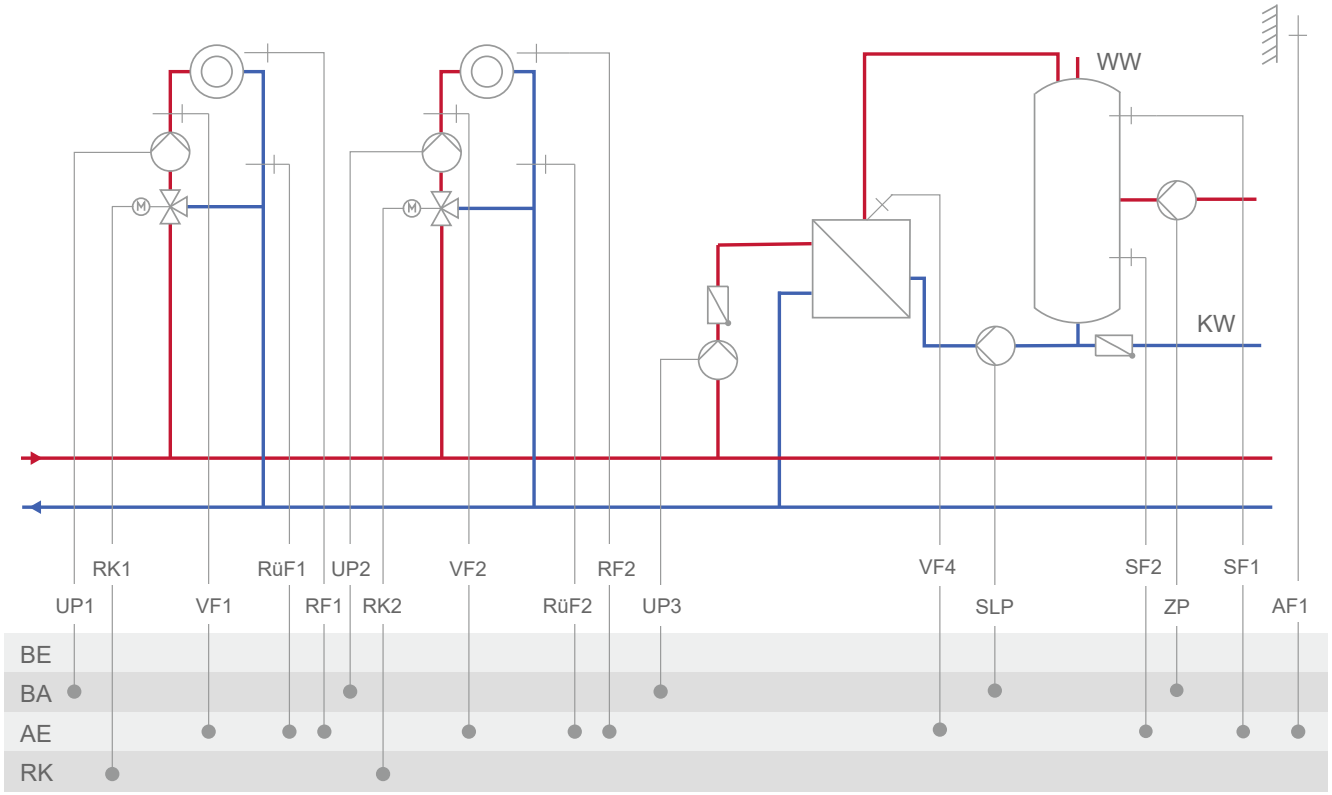
WW
KW
RK1
UP1
VF1
RüF1
RF1
UP2
RK2
VF2
RüF2
RF2
UP3
VF4
SLP
SF2
ZP
SF1
AF1
BE
BA
AE
RK

System	**10.2**
	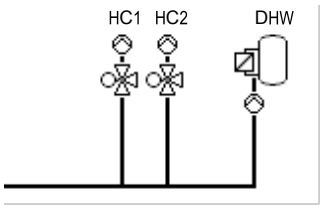
RK2: CO2 → F02 - 0 = Fixed set point control; CO2 → F02 - 1, select AF1 = Outdoor-temperature-compensated control with AF1; CO2→ F02 - 1, select AF2 = Outdoor-temperature-compensated control with AF2	
Default setting	
CO1 → F01	- 0 (without RF1)
CO1 → F02	- 1 (with AF1)
CO1 → F03	- 0 (without RüF1)
CO2 → F01	- 0 (without RF2)
CO2 → F02	- 1 (with AF1)
CO2 → F03	- 0 (without RüF2)
CO4 → F01	- 1 (with SF1)
CO4 → F02	- 1 (with SF2)
CO4 → F05	- 0 (without VF4)
CO5 → F07	- 0 (without error message at terminal 46)
CO5 → F34, F35, F36, F37	Function AA1, AA2, AA3, AA4: – Control signal Y1 (RK1) – Control signal Y2 (RK2) – External demand — When CO1 → F18 - 1 – SLP speed — When CO4 → F21 - 1 – ZP speed — When CO4 → F25 - 1 – Outdoor temperature — When CO5 → F23 - 1 Direction 'Output'

System 10.3-1

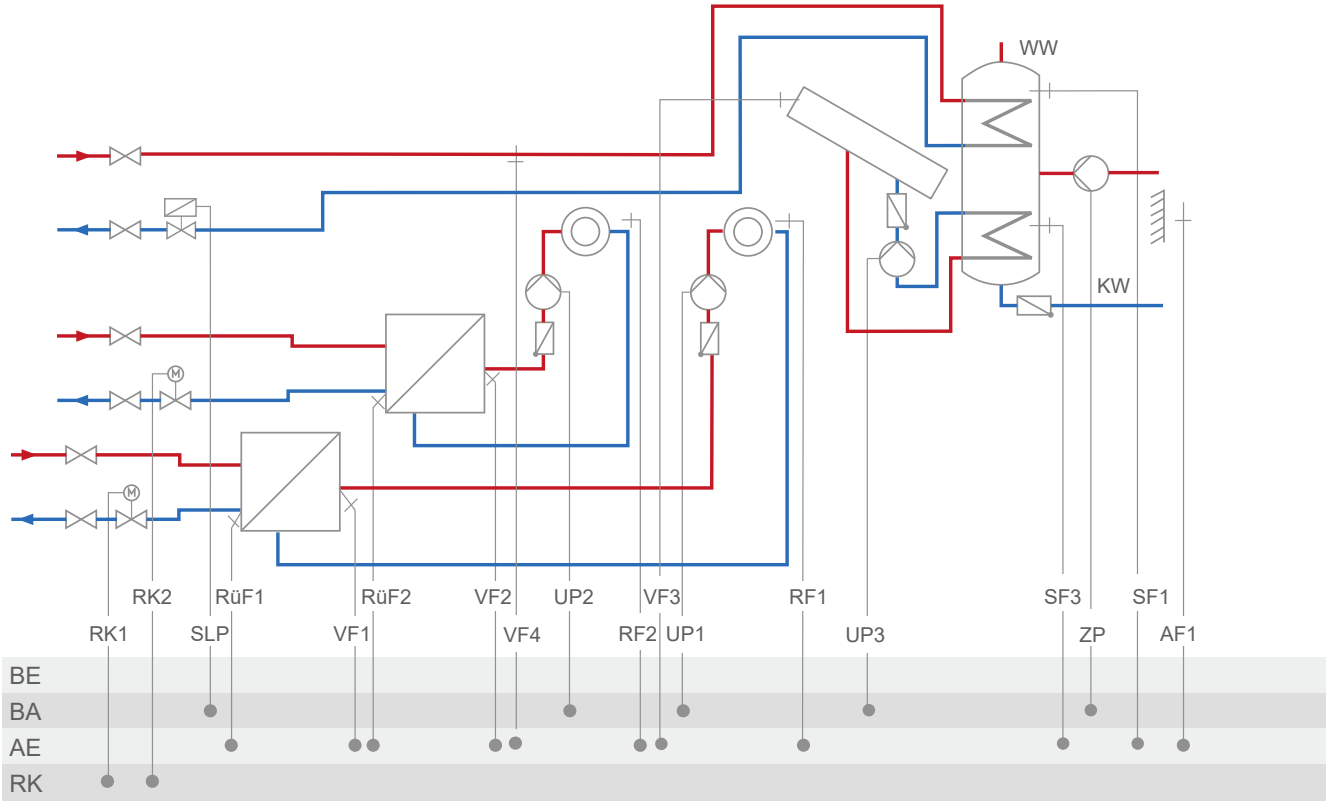
WW
KW
RK2
RüF1
RüF2
VF2
UP2
VF3
RF1
SF3
SF1
RK1
SLP
VF1
VF4
RF2
UP1
UP3
ZP
AF1
BE
BA
AE
RK

System	**10.3-1**
	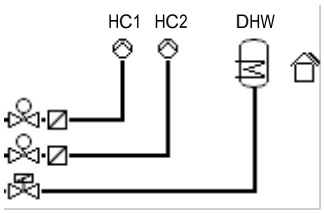
RK2: CO2 → F02 - 0 = Fixed set point control; CO2 → F02 - 1, select AF1 = Outdoor-temperature-compensated control with AF1; CO2→ F02 - 1, select AF2 = Outdoor-temperature-compensated control with AF2	
Default setting	
CO1 → F01	- 0 (without RF1)
CO1 → F02	- 1 (with AF1)
CO1 → F03	- 0 (without RüF1)
CO2 → F01	- 0 (without RF2)
CO2 → F02	- 1 (with AF1)
CO2 → F03	- 0 (without RüF2)
CO4 → F01	- 1 (with SF1)
CO4 → F02	- 0 (without SF2)
CO4 → F05	- 0 (without VF4)
CO5 → F07	- 0 (without error message at terminal 46)
CO5 → F34, F35, F36, F37	Function AA1, AA2, AA3, AA4: – Control signal Y1 (RK1) – Control signal Y2 (RK2) – External demand — When CO1 → F18 - 1 – ZP speed — When CO4 → F25 - 1 – Outdoor temperature — When CO5 → F23 - 1 Direction 'Output'

System 10.3-2

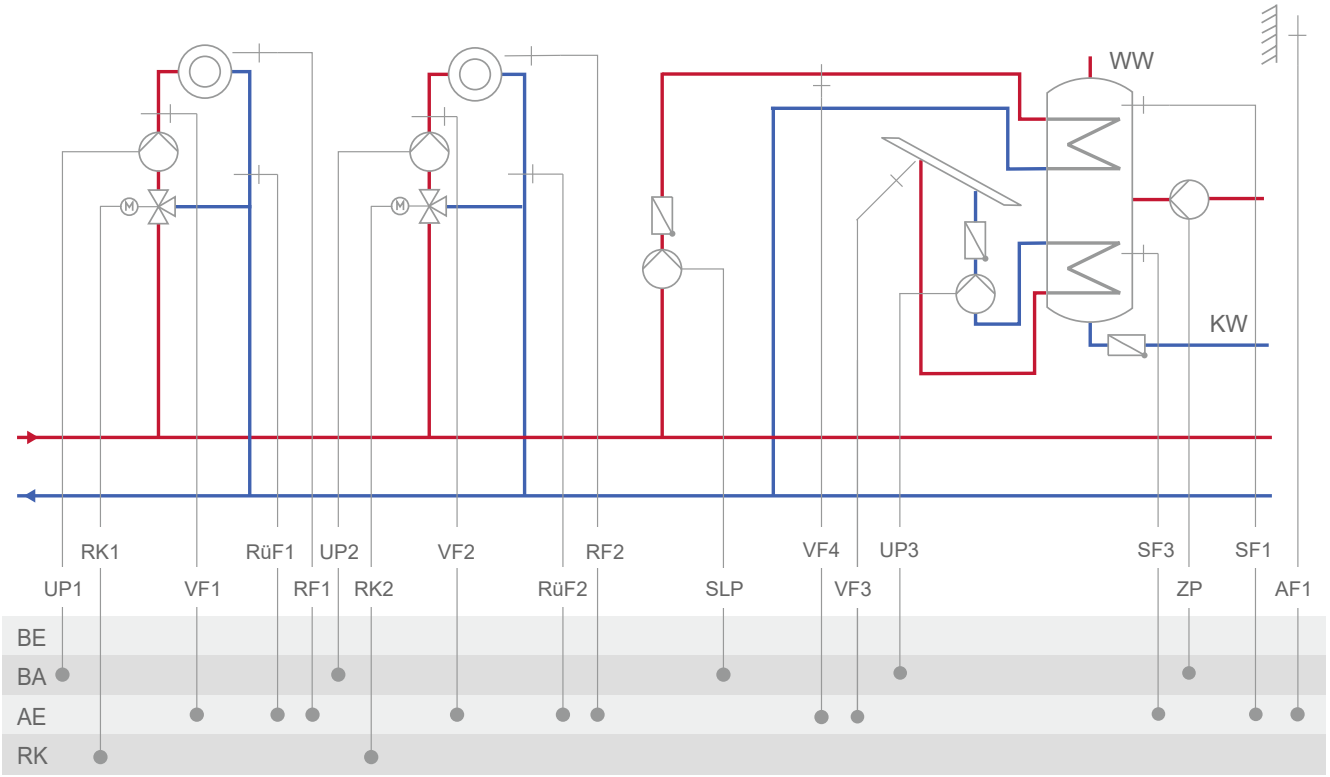
WW
KW
RK1
RüF1
UP2
VF2
RF2
VF4
UP3
SF3
SF1
UP1
VF1
RF1
RK2
RüF2
SLP
VF3
ZP
AF1
BE
BA
AE
RK

System	**10.3-2**
	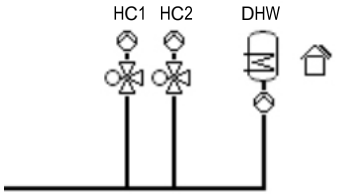
RK2: CO2 → F02 - 0 = Fixed set point control; CO2 → F02 - 1, select AF1 = Outdoor-temperature-compensated control with AF1; CO2→ F02 - 1, select AF2 = Outdoor-temperature-compensated control with AF2	
Default setting	
CO1 → F01	- 0 (without RF1)
CO1 → F02	- 1 (with AF1)
CO1 → F03	- 0 (without RüF1)
CO2 → F01	- 0 (without RF2)
CO2 → F02	- 1 (with AF1)
CO2 → F03	- 0 (without RüF2)
CO4 → F01	- 1 (with SF1)
CO4 → F02	- 0 (without SF2)
CO4 → F05	- 0 (without VF4)
CO5 → F07	- 0 (without error message at terminal 46)
CO5 → F34, F35, F36, F37	Function AA1, AA2, AA3, AA4: – Control signal Y1 (RK1) – Control signal Y2 (RK2) – External demand — When CO1 → F18 - 1 – SLP speed — When CO4 → F21 - 1 – ZP speed — When CO4 → F25 - 1 – Outdoor temperature — When CO5 → F23 - 1 Direction 'Output'

System 10.5

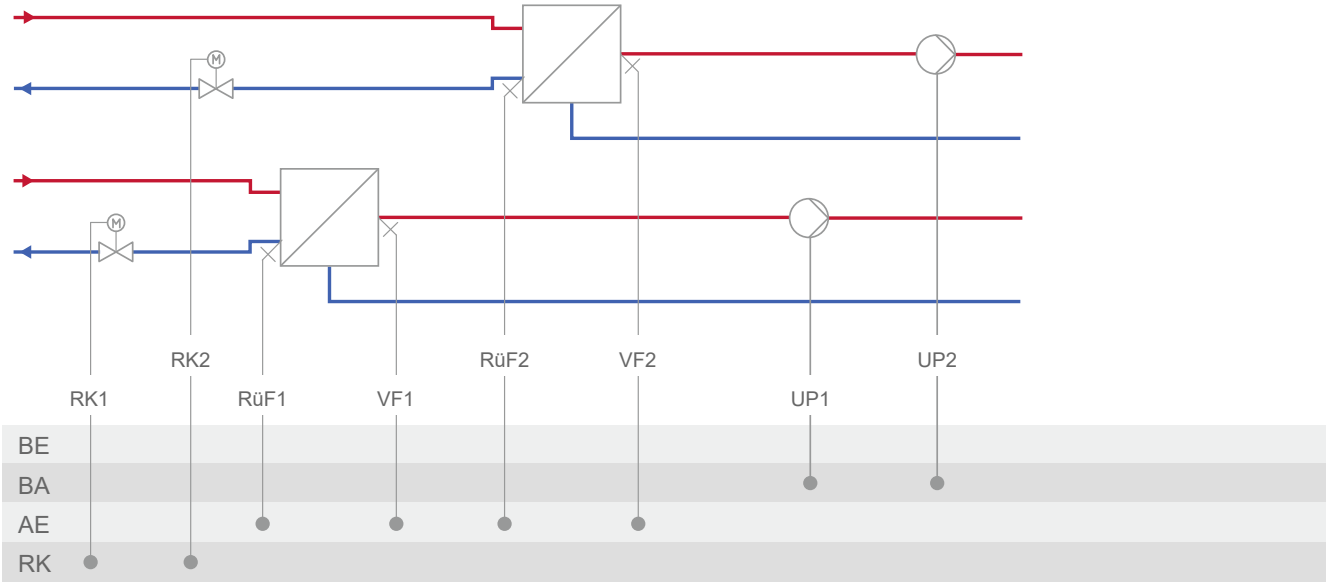

System	10.5
	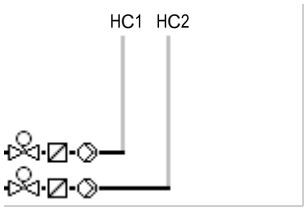
Default setting	
CO1 → F02	- 0 (without AF1)
CO1 → F03	- 1 (with RüF1)
CO2 → F02	- 0 (without AF1)
CO2 → F03	- 1 (with RüF2)
CO5 → F07	- 0 (without error message at terminal 37)
CO5 → F34, F35, F36, F37	Function AA1, AA2, AA3, AA4: – Control signal Y1 (RK1) – Control signal Y2 (RK2) – External demand When CO1 → F18 - 1

System 11.0

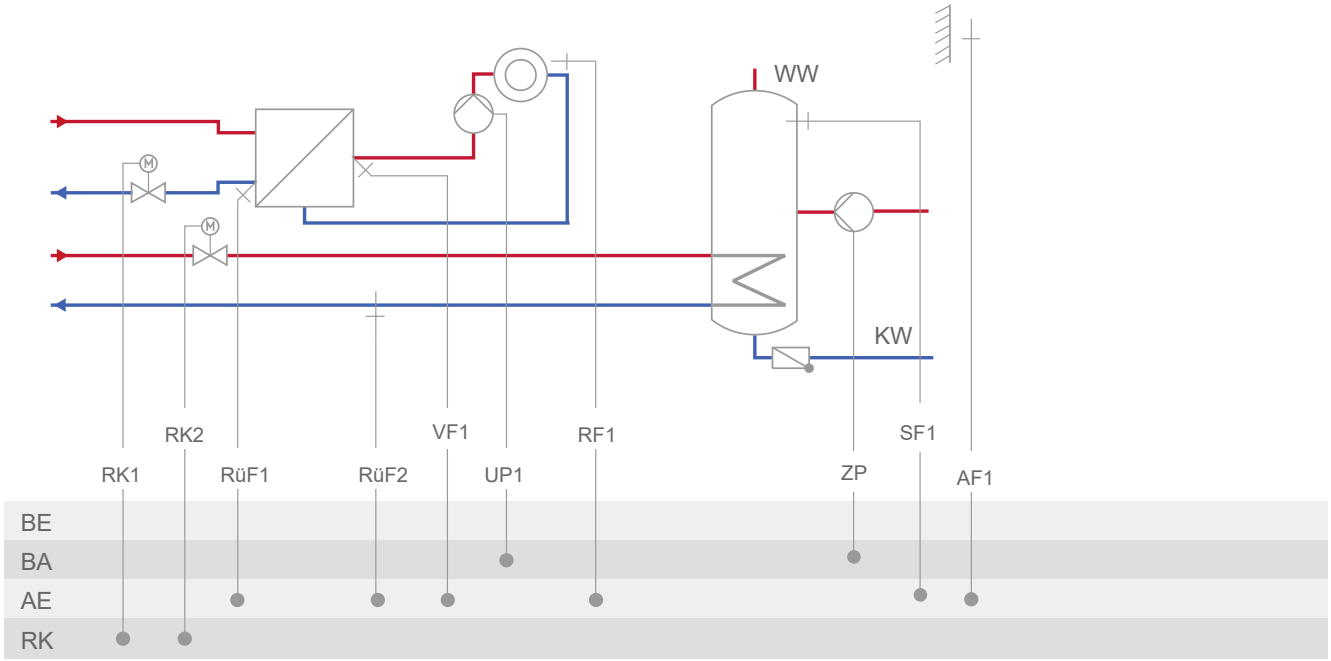

System	11.0
	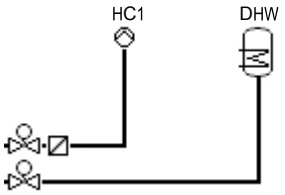
Default setting	
CO1 → F01	- 0 (without RF1)
CO1 → F02	- 1 (with AF1)
CO1 → F03	- 1 (with RüF1)
CO4 → F03	- 0 (without RüF2)
CO5 → F07	- 0 (without error message at terminal 46)
CO5 → F34, F35, F36, F37	Function AA1, AA2, AA3, AA4: – Control signal Y1 (RK1) – Control signal Y2 (RK2) – External demand — When CO1 → F18 - 1 – ZP speed — When CO4 → F25 - 1 – Outdoor temperature — When CO5 → F23 - 1 Direction 'Output'

System 11.1-1

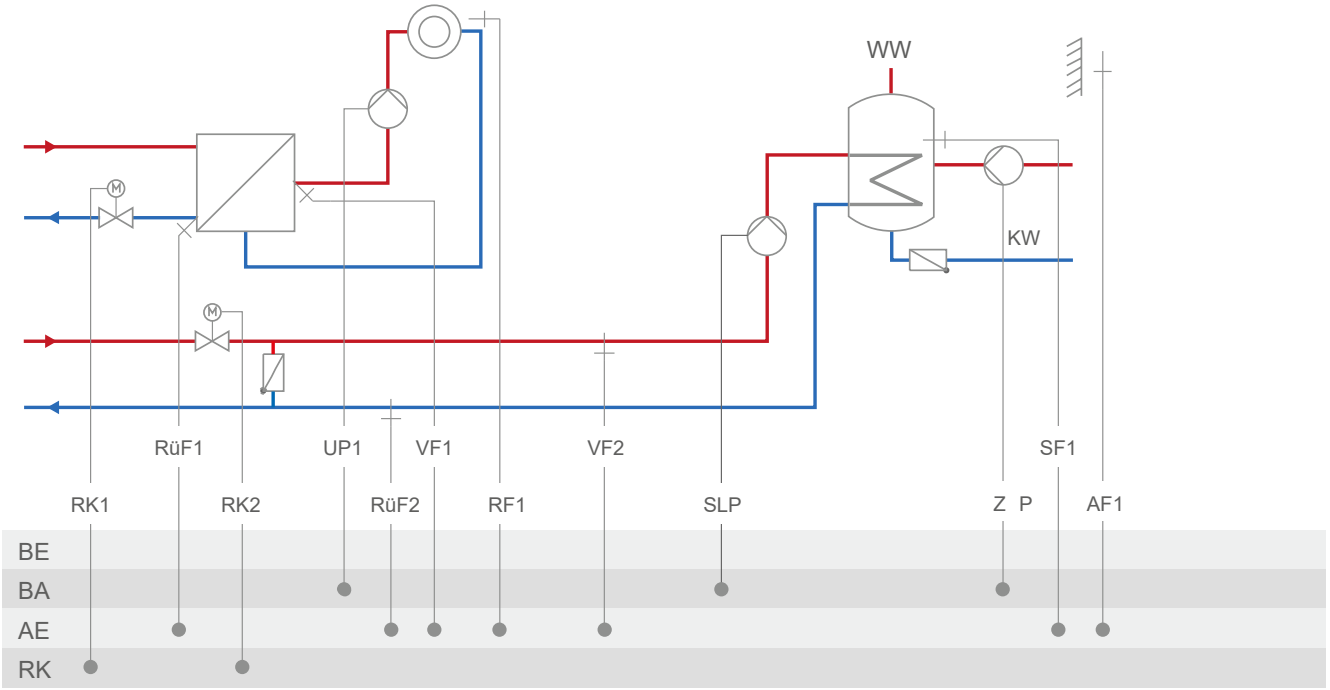

System	11.1-1
	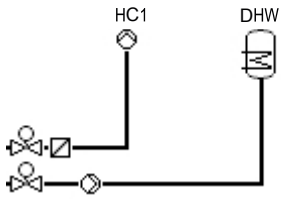
Default setting	
CO1 → F01	- 0 (without RF1)
CO1 → F02	- 1 (with AF1)
CO1 → F03	- 1 (with RüF1)
CO4 → F01	- 1 (with SF1)
CO4 → F02	- 0 (without SF2)
CO4 → F03	- 0 (without RüF2)
CO5 → F07	- 0 (without error message at terminal 46)
CO5 → F34, F35, F36, F37	Function AA1, AA2, AA3, AA4: – Control signal Y1 (RK1) – Control signal Y2 (RK2) – External demand — When CO1 → F18 - 1 – SLP speed — When CO4 → F21 - 1 – ZP speed — When CO4 → F25 - 1 – Outdoor temperature — When CO5 → F23 - 1 Direction 'Output'

System 11.1-2

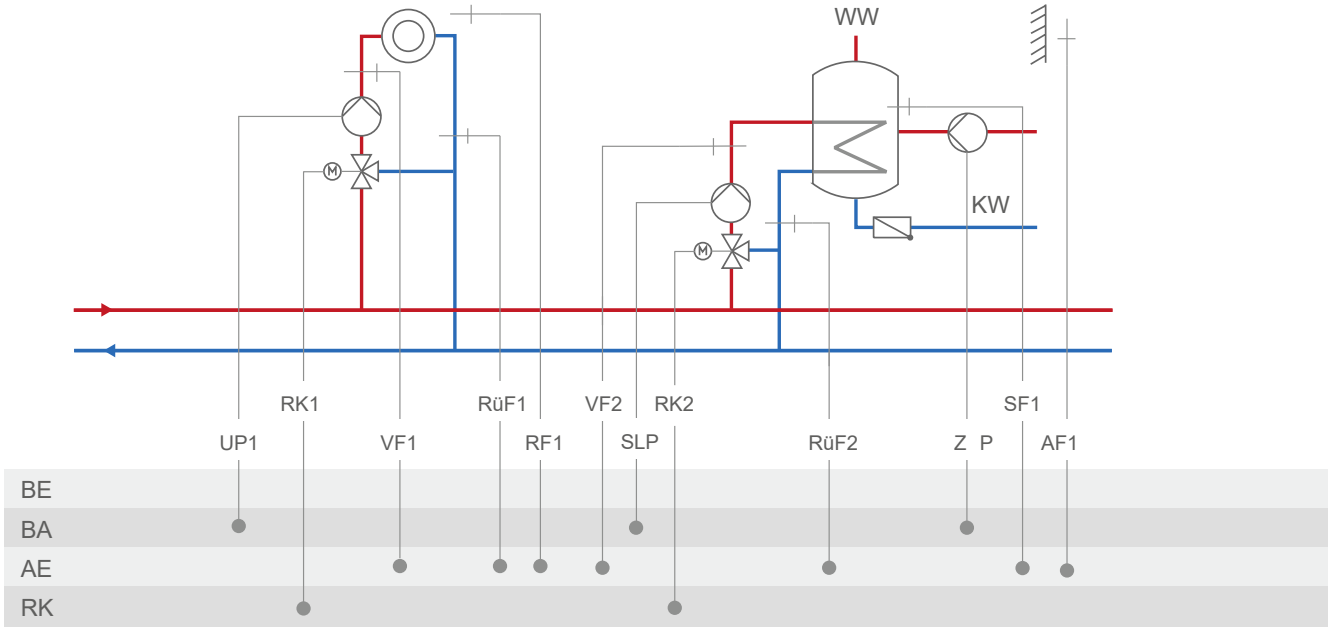

System	11.1-2
	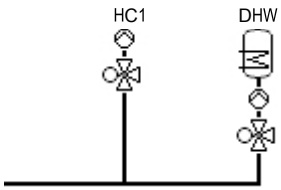
Default setting	
CO1 → F01	- 0 (without RF1)
CO1 → F02	- 1 (with AF1)
CO1 → F03	- 1 (with RüF1)
CO4 → F01	- 1 (with SF1)
CO4 → F02	- 0 (without SF2)
CO4 → F03	- 0 (without RüF2)
CO5 → F07	- 0 (without error message at terminal 46)
CO5 → F34, F35, F36, F37	Function AA1, AA2, AA3, AA4: – Control signal Y1 (RK1) – Control signal Y2 (RK2) – External demand — When CO1 → F18 - 1 – SLP speed — When CO4 → F21 - 1 – ZP speed — When CO4 → F25 - 1 – Outdoor temperature — When CO5 → F23 - 1 Direction 'Output'

System 11.1-3

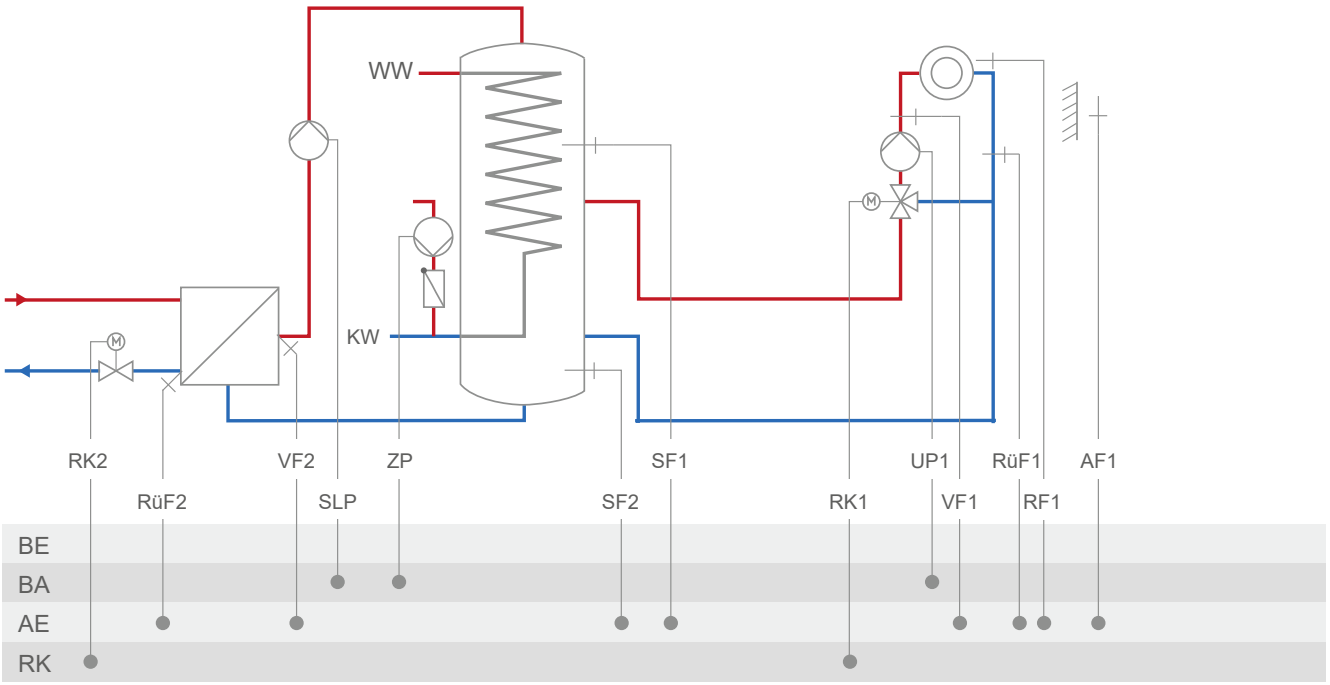

System	11.1-3
	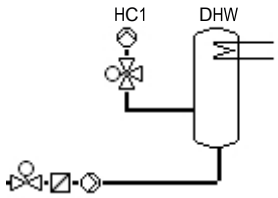
Default setting	
CO1 → F01	- 0 (without RF1)
CO1 → F02	- 1 (with AF1)
CO1 → F03	- 1 (with RüF1)
CO4 → F01	- 1 (with SF1)
CO4 → F02	- 0 (without SF2)
CO4 → F03	- 0 (without RüF2)
CO5 → F07	- 0 (without error message at terminal 46)
CO5 → F34, F35, F36, F37	Function AA1, AA2, AA3, AA4: – Control signal Y1 (RK1) – Control signal Y2 (RK2) – External demand — When CO1 → F18 - 1 – SLP speed — When CO4 → F21 - 1 – ZP speed — When CO4 → F25 - 1 – Outdoor temperature — When CO5 → F23 - 1 Direction 'Output'

System 11.2-1

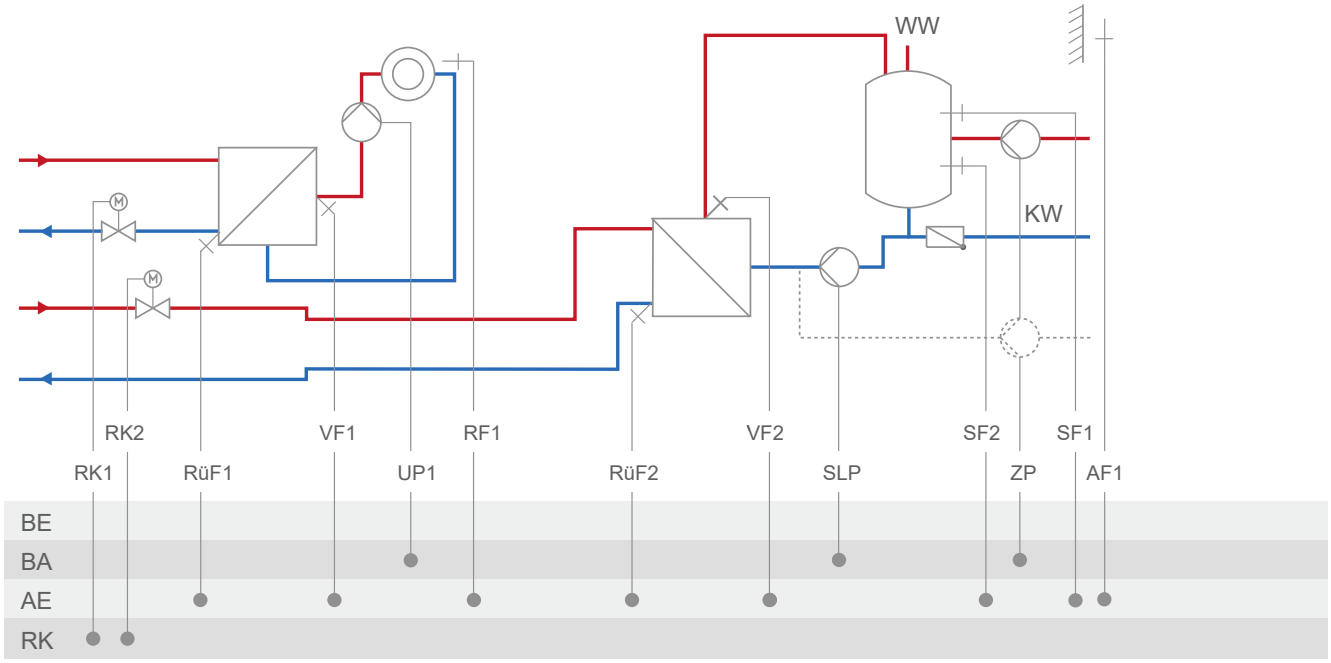

System	11.2-1
	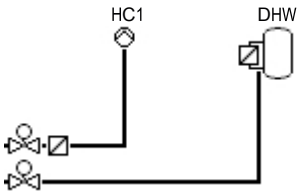
Default setting	
CO1 → F01	- 0 (without RF1)
CO1 → F02	- 1 (with AF1)
CO1 → F03	- 1 (with RüF1)
CO4 → F01	- 1 (with SF1)
CO4 → F02	- 1 (with SF2)
CO4 → F03	- 0 (without RüF2)
CO4 → F10	- 0 (DHW circulation return in storage tank)
CO5 → F07	- 0 (without error message at terminal 46)
CO5 → F34, F35, F36, F37	Function AA1, AA2, AA3, AA4: – Control signal Y1 (RK1) – Control signal Y2 (RK2) – External demand — When CO1 → F18 - 1 – SLP speed — When CO4 → F21 - 1 – ZP speed — When CO4 → F25 - 1 – Outdoor temperature — When CO5 → F23 - 1 Direction 'Output'

System 11.2-2

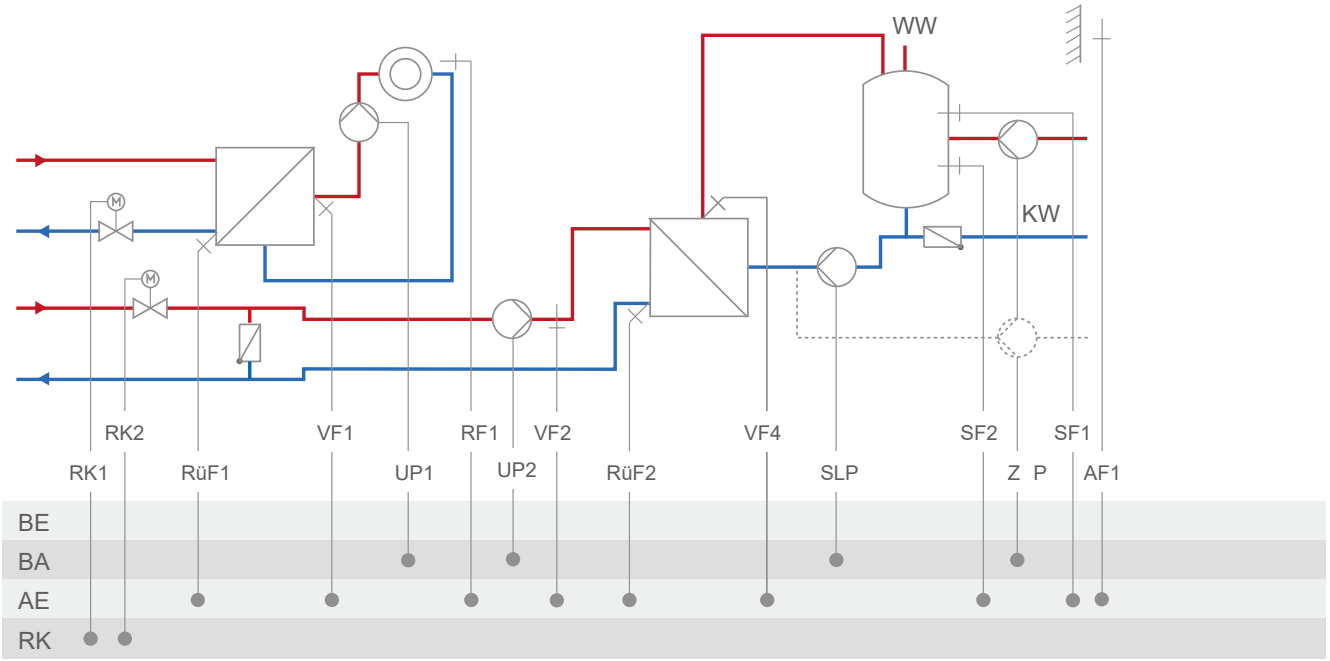

System	11.2-2
	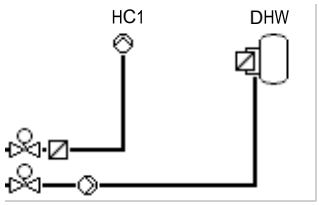
Default setting	
CO1 → F01	- 0 (without RF1)
CO1 → F02	- 1 (with AF1)
CO1 → F03	- 1 (with RüF1)
CO4 → F01	- 1 (with SF1)
CO4 → F02	- 1 (with SF2)
CO4 → F03	- 0 (without RüF2)
CO4 → F05	- 0 (without VF4; in this case, VF2 usually installed at the point of measurement of VF4)
CO4 → F10	- 0 (DHW circulation return in storage tank)
CO5 → F07	- 0 (without error message at terminal 46)
CO5 → F34, F35, F36, F37	Function AA1, AA2, AA3, AA4: – Control signal Y1 (RK1) – Control signal Y2 (RK2) – External demand — When CO1 → F18 - 1 – SLP speed — When CO4 → F21 - 1 – ZP speed — When CO4 → F25 - 1 – Outdoor temperature — When CO5 → F23 - 1 Direction 'Output'

System 11.2-3

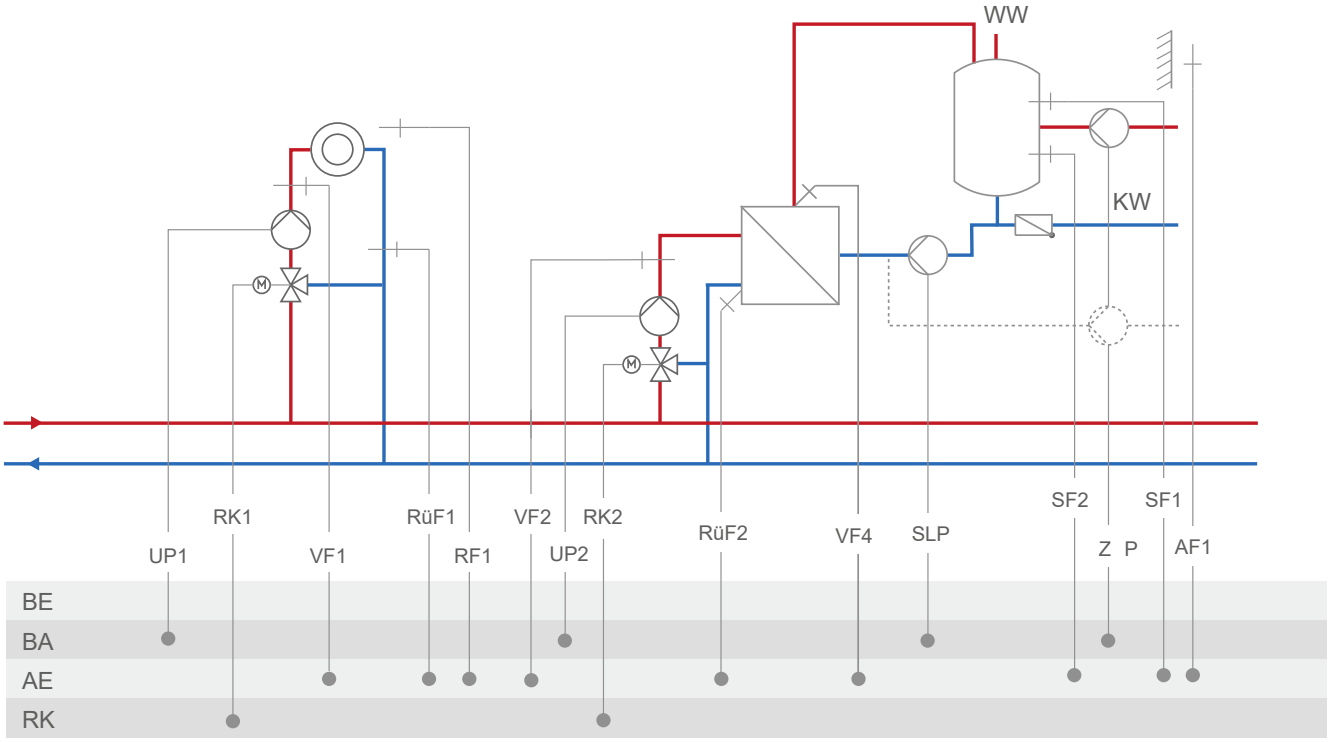

System	11.2-3
	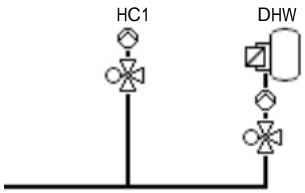
Default setting	
CO1 → F01	- 0 (without RF1)
CO1 → F02	- 1 (with AF1)
CO1 → F03	- 1 (with RüF1)
CO4 → F01	- 1 (with SF1)
CO4 → F02	- 1 (with SF2)
CO4 → F03	- 0 (without RüF2)
CO4 → F05	- 0 (without VF4; in this case, VF2 usually installed at the point of measurement of VF4)
CO4 → F10	- 0 (DHW circulation return in storage tank)
CO5 → F07	- 0 (without error message at terminal 46)
CO5 → F34, F35, F36, F37	Function AA1, AA2, AA3, AA4: – Control signal Y1 (RK1) – Control signal Y2 (RK2) – External demand — When CO1 → F18 - 1 – SLP speed — When CO4 → F21 - 1 – ZP speed — When CO4 → F25 - 1 – Outdoor temperature — When CO5 → F23 - 1 Direction 'Output'

System 11.3

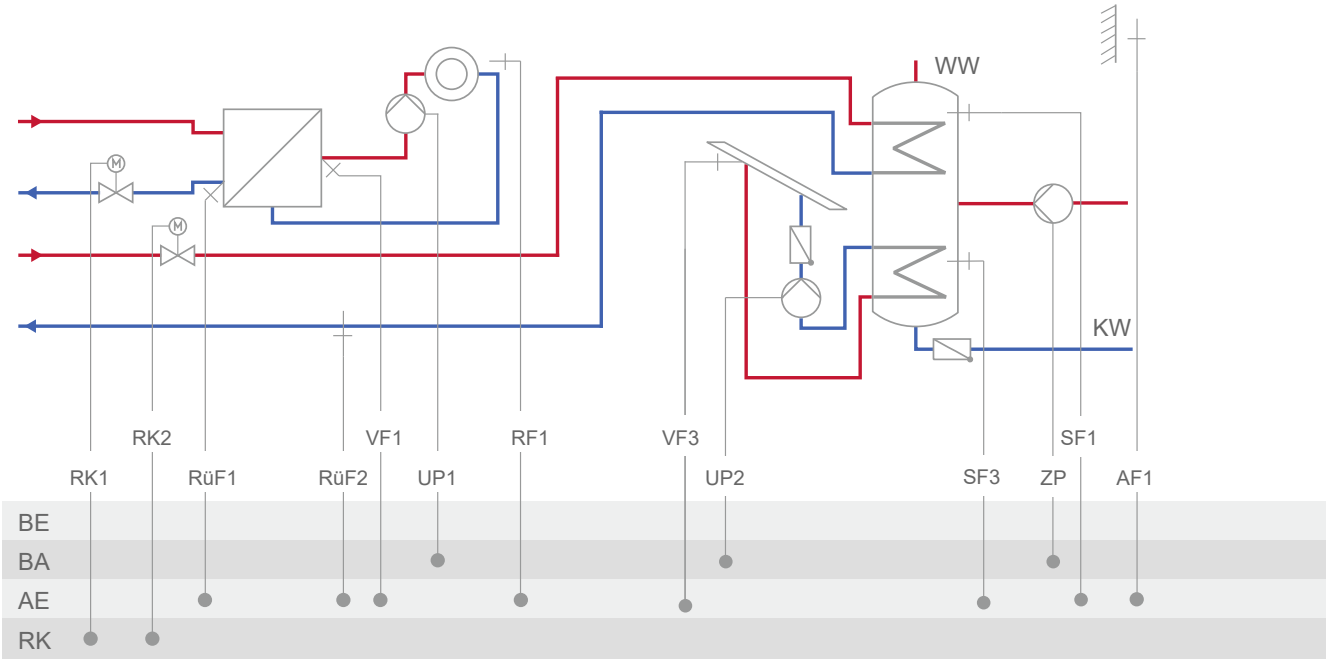

System	11.3
	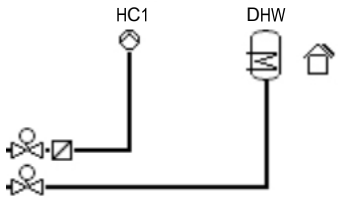
Default setting	
CO1 → F01	- 0 (without RF1)
CO1 → F02	- 1 (with AF1)
CO1 → F03	- 1 (with RüF1)
CO4 → F03	- 0 (without RüF2)
CO5 → F07	- 0 (without error message at terminal 46)
CO5 → F34, F35, F36, F37	Function AA1, AA2, AA3, AA4: – Control signal Y1 (RK1) – Control signal Y2 (RK2) – External demand — When CO1 → F18 - 1 – ZP speed — When CO4 → F25 - 1 – Outdoor temperature — When CO5 → F23 - 1 Direction 'Output'

System 11.4

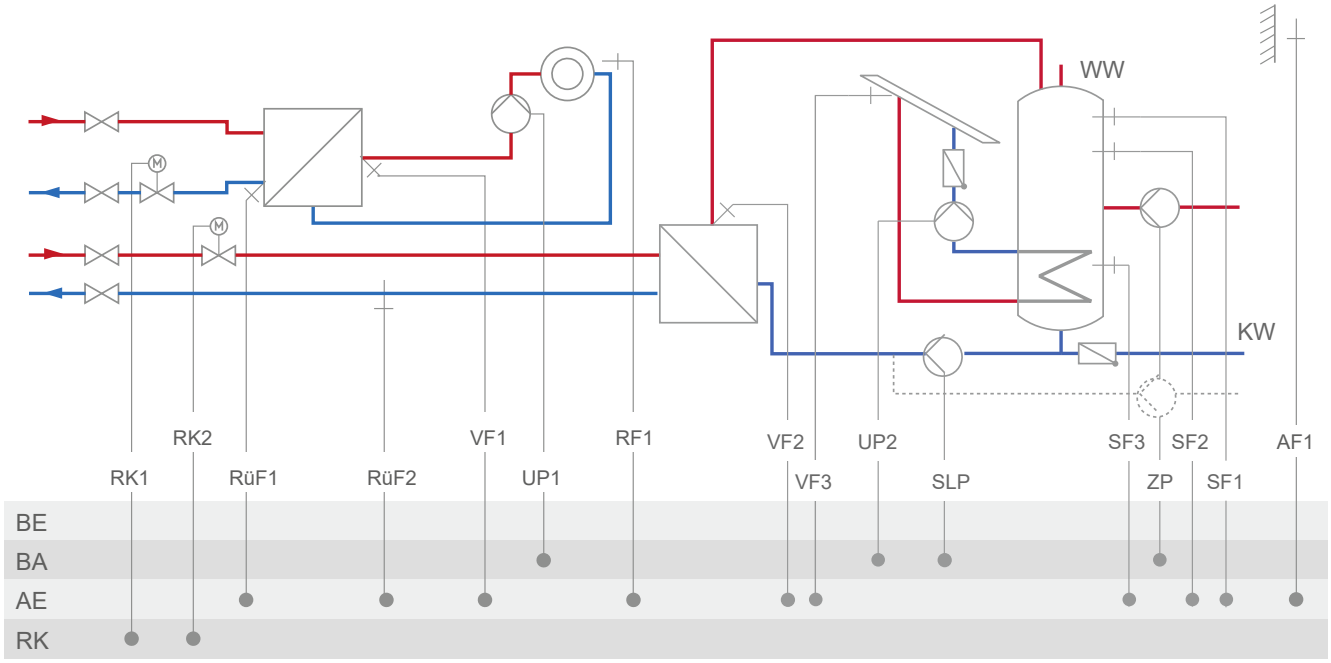

System	11.4
	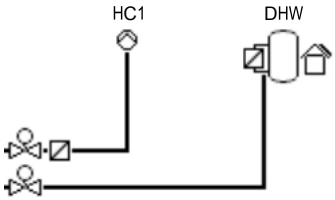
Default setting	
CO1 → F01	- 0 (without RF1)
CO1 → F02	- 1 (with AF1)
CO1 → F03	- 1 (with RüF1)
CO4 → F01	- 1 (with SF1)
CO4 → F02	- 1 (with SF2)
CO4 → F03	- 0 (without RüF2)
CO4 → F10	- 0 (DHW circulation return in storage tank)
CO5 → F07	- 0 (without error message at terminal 46)
CO5 → F34, F35, F36, F37	Function AA1, AA2, AA3, AA4: – Control signal Y1 (RK1) – Control signal Y2 (RK2) – External demand — When CO1 → F18 - 1 – SLP speed — When CO4 → F21 - 1 – ZP speed — When CO4 → F25 - 1 – Outdoor temperature — When CO5 → F23 - 1 Direction 'Output'

System 11.5

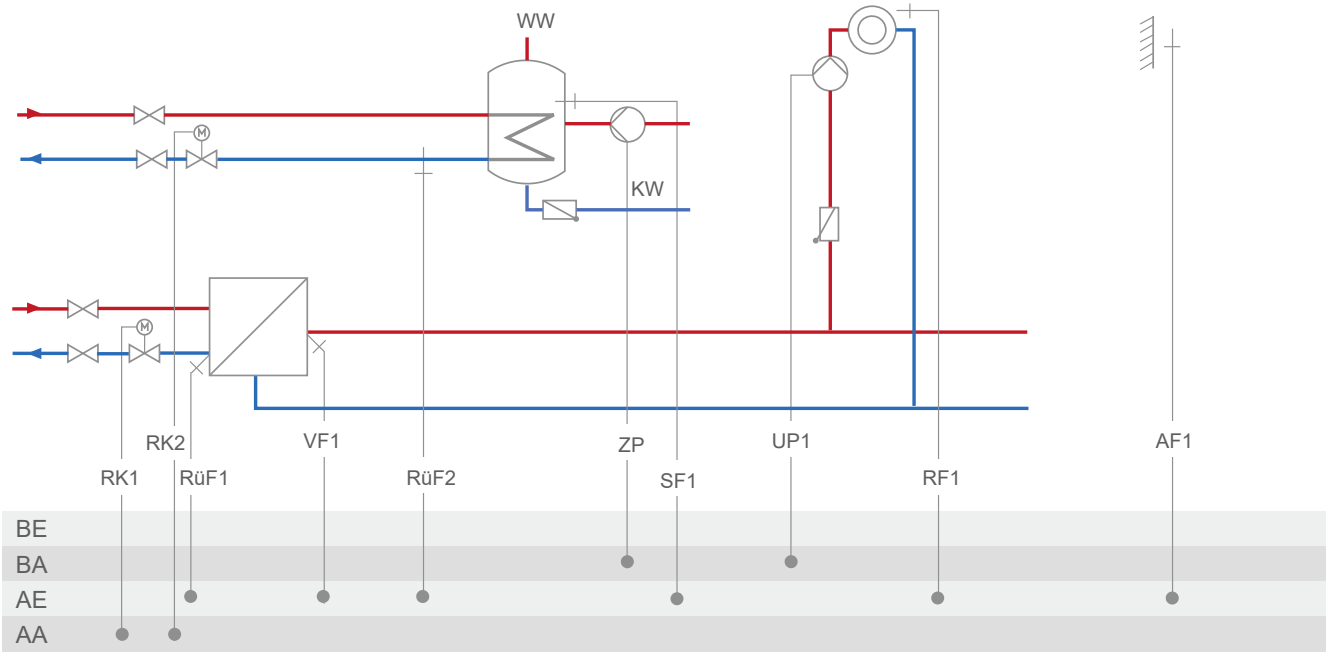

System	11.5
	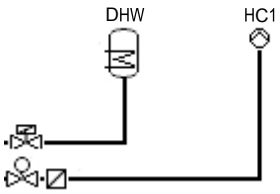
Note:	DHW circuit with adjustable valve position for storage tank charging in absolute priority operation By using RüF2, the ready-adjusted valve position is subject to the return temperature limitation.
Default setting	
CO1 → F01	- 0 (without RF1)
CO1 → F02	- 1 (with AF1)
CO4 → F02	- 0 (without SF2)
CO4 → F03	- 1 (with RüF2)
CO5 → F07	- 0 (without error message at terminal 46)
CO5 → F34, F35, F36, F37	Function AA1, AA2, AA3, AA4: – Control signal Y1 (RK1) – Control signal Y2 (RK2) – External demand — When CO1 → F18 - 1 – ZP speed — When CO4 → F25 - 1 – Outdoor temperature — When CO5 → F23 - 1 Direction 'Output'

System 11.6-1

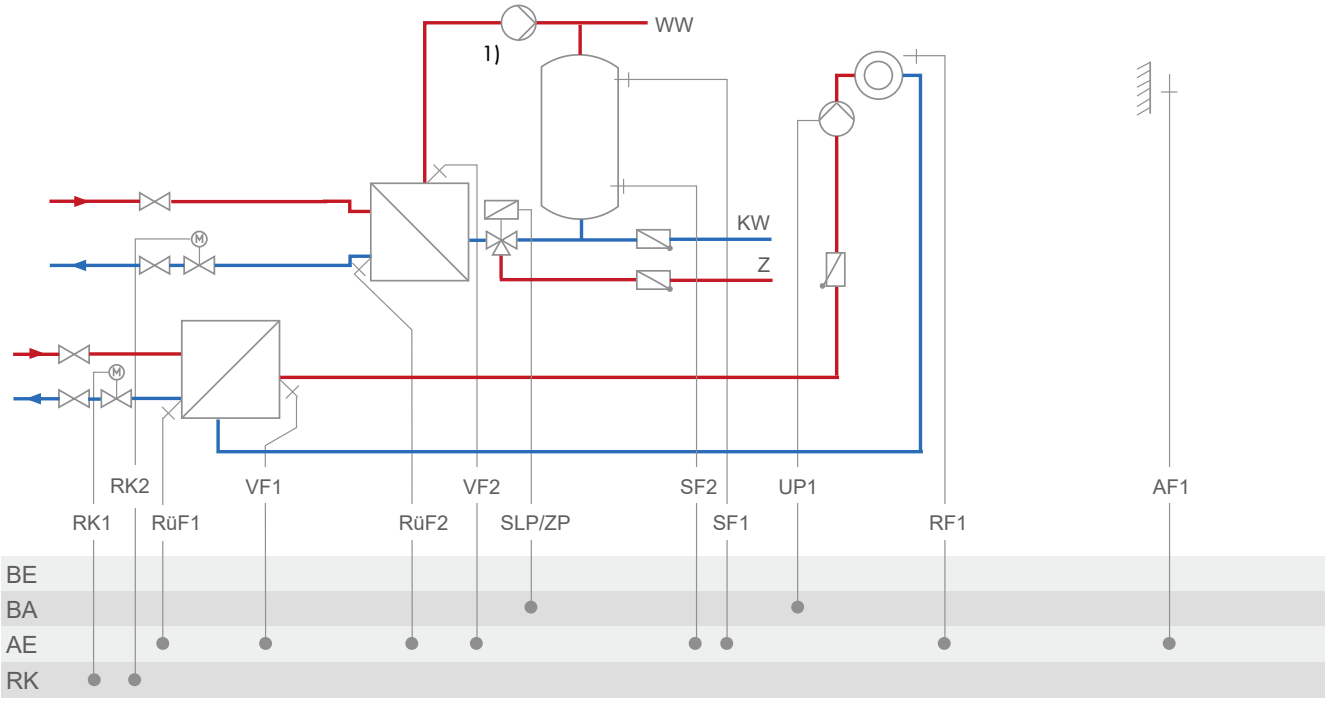

System	11.6-1
	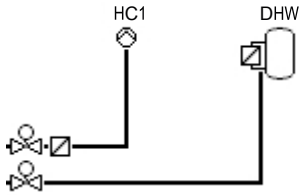
[1] Note:	Install a continuously running pump in the DHW circuit and connect it directly to the supply voltage.
Default setting	
CO1 → F01	- 0 (without RF1)
CO1 → F02	- 1 (with AF1)
CO1 → F03	- 1 (with RüF1)
CO4 → F01	- 1 (with SF1)
CO4 → F02	- 1 (with SF2)
CO4 → F03	- 0 (without RüF2)
CO5 → F07	- 0 (without error message at terminal 46)
CO5 → F34, F35, F36, F37	Function AA1, AA2, AA3, AA4: – Control signal Y1 (RK1) – Control signal Y2 (RK2) – External demand — When CO1 → F18 - 1 – Outdoor temperature — When CO5 → F23 - 1 Direction 'Output'

System 11.6.-2

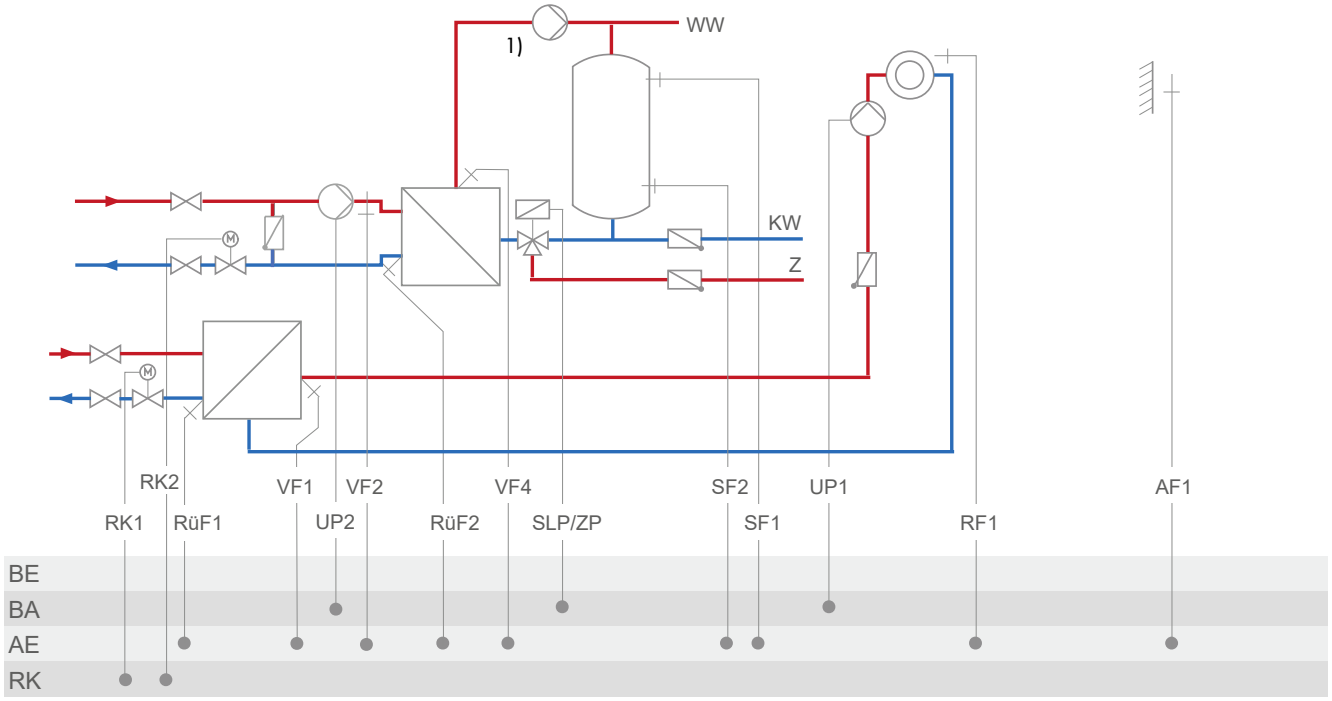

System	11.6-2
	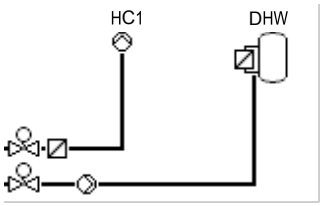
[1] Note:	Install a continuously running pump in the DHW circuit and connect it directly to the supply voltage.
Default setting	
CO1 → F01	- 0 (without RF1)
CO1 → F02	- 1 (with AF1)
CO1 → F03	- 1 (with RüF1)
CO4 → F01	- 1 (with SF1)
CO4 → F02	- 1 (with SF2)
CO4 → F03	- 0 (without RüF2)
CO4 → F05	- 0 (without VF4; in this case, VF2 usually installed at the point of measurement of VF4)
CO5 → F07	- 0 (without error message at terminal 46)
CO5 → F34, F35, F36, F37	Function AA1, AA2, AA3, AA4: – Control signal Y1 (RK1) – Control signal Y2 (RK2) – External demand — When CO1 → F18 - 1 – Outdoor temperature — When CO5 → F23 - 1 Direction 'Output'

System 11.9-1

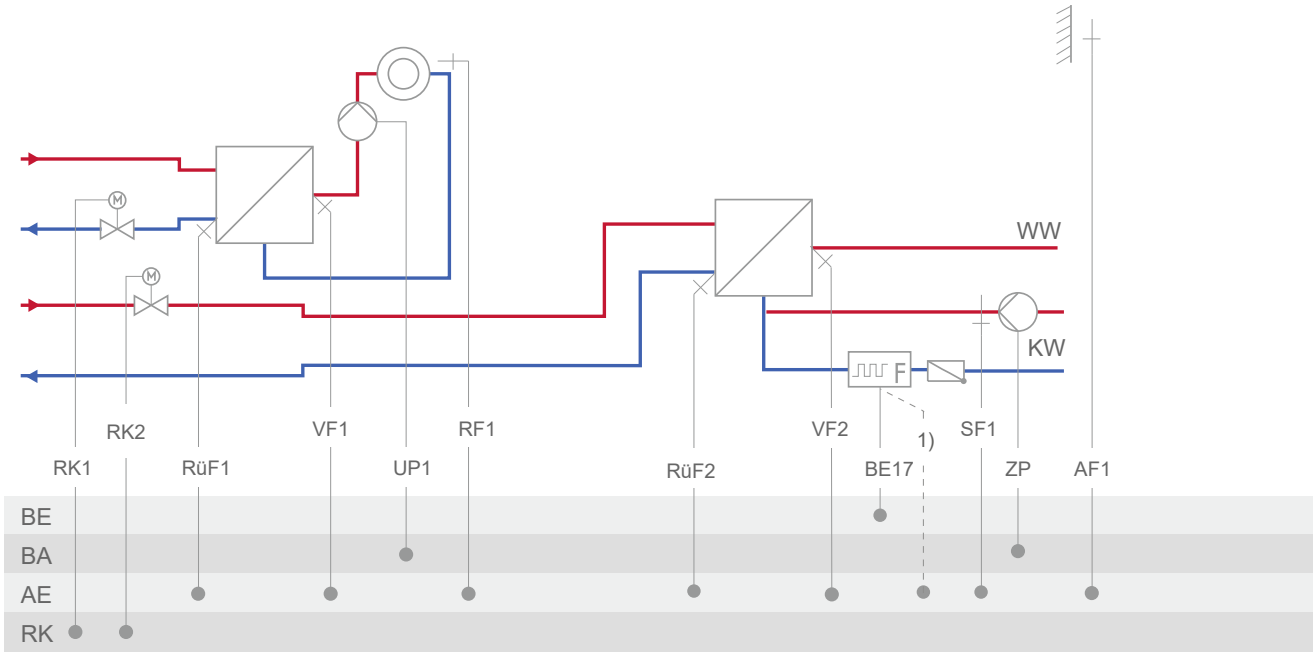

1) bei Vortex-Sensor Kl. 15, 16 oder 17

System	11.9-1
	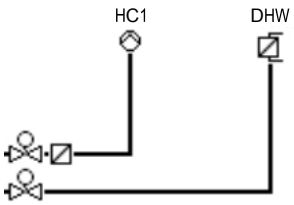
Default setting	
CO1 → F01	- 0 (without RF1)
CO1 → F02	- 1 (with AF1)
CO1 → F03	- 1 (with RüF1)
CO4 → F01	- 0 (without SF1)
CO4 → F03	- 0 (without RüF2)
CO4 → F04	- 0 (without water flow sensor)
CO5 → F07	- 0 (without error message at terminal 37)
CO5 → F34, F35, F36, F37	Function AA1, AA2, AA3, AA4: – Control signal Y1 (RK1) – Control signal Y2 (RK2) – 5 V supply – 10 V supply – External demand — When CO1 → F18 - 1 – ZP speed — When CO4 → F25 - 1 – Outdoor temperature — When CO5 → F23 - 1 Direction 'Output'

System 11.9-2

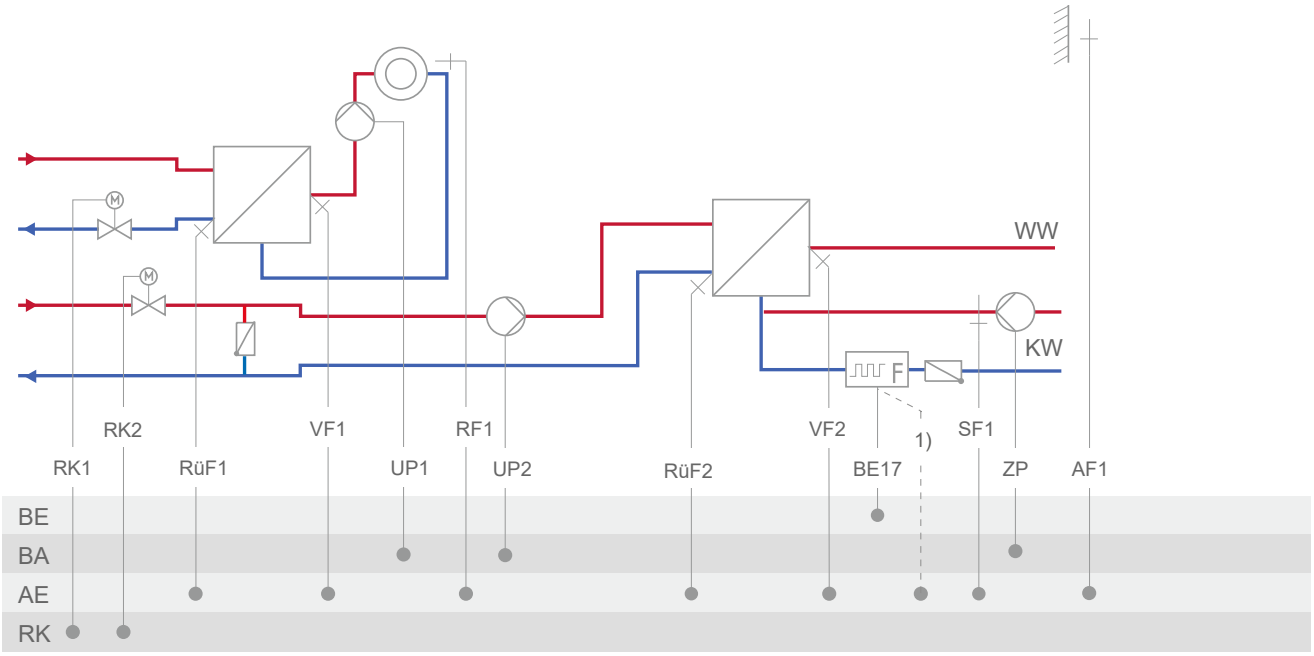

1) bei Vortex-Sensor Kl. 15, 16 oder 17

System	11.9-2
	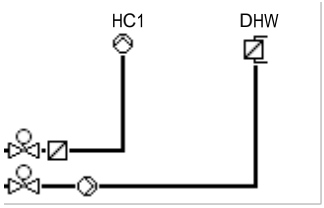
Default setting	
CO1 → F01	- 0 (without RF1)
CO1 → F02	- 1 (with AF1)
CO1 → F03	- 1 (with RüF1)
CO4 → F01	- 0 (without SF1)
CO4 → F03	- 0 (without RüF2)
CO4 → F04	- 0 (without water flow sensor)
CO5 → F07	- 0 (without error message at terminal 37)
CO5 → F34, F35, F36, F37	Function AA1, AA2, AA3, AA4: – Control signal Y1 (RK1) – Control signal Y2 (RK2) – 5 V supply – 10 V supply – External demand — When CO1 → F18 - 1 – ZP speed — When CO4 → F25 - 1 – Outdoor temperature — When CO5 → F23 - 1 Direction 'Output'

System 12.0

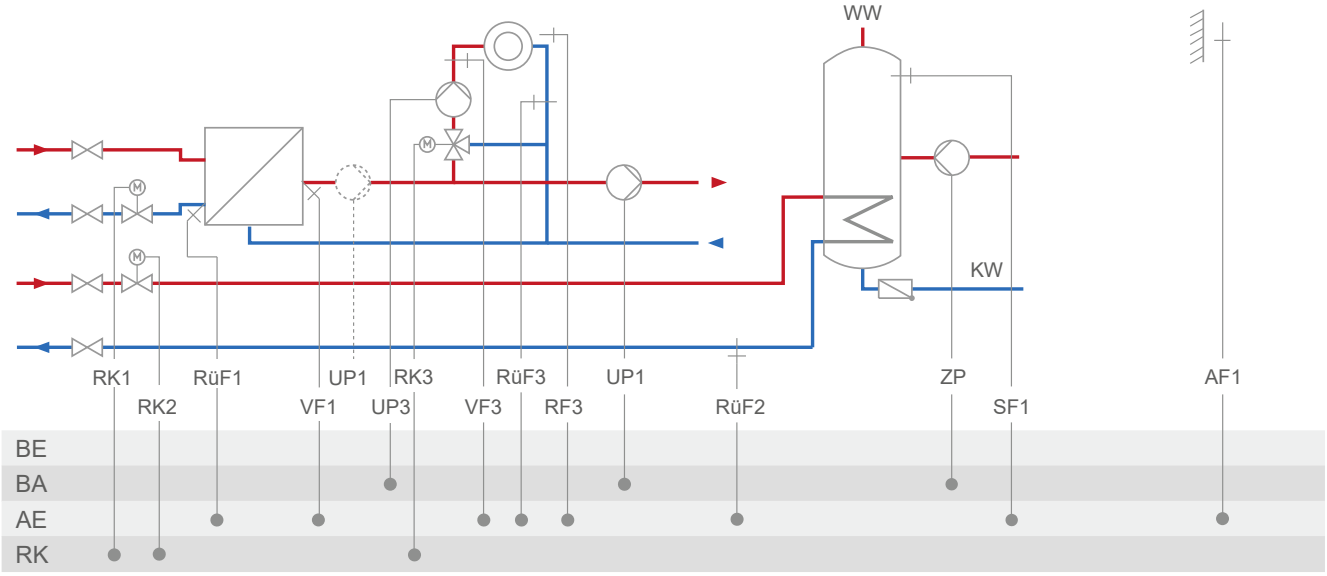

System	12.0
	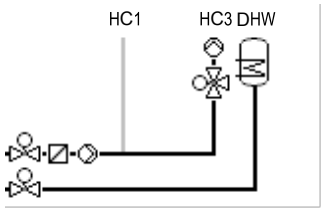
RK3: CO3 → F02 - 0 = Fixed set point control; CO3 → F02 - 1, select AF1 = Outdoor-temperature-compensated control with AF1; CO3→ F02 - 1, select AF2 = Outdoor-temperature-compensated control with AF2	
Default setting	
CO1 → F02	- 1 (with AF1)
CO1 → F03	- 1 (with RüF1)
CO3 → F01	- 0 (without RF3)
CO3 → F02	- 1 (with AF1)
CO3 → F03	- 0 (without RüF3)
CO4 → F03	- 0 (without RüF2)
CO5 → F07	- 0 (without error message at terminal 37)
CO5 → F14	- 0 (UP1 only active during the processing for an external demand)
CO5 → F34, F35, F36, F37	Function AA1, AA2, AA3, AA4: – Control signal Y1 (RK1) – Control signal Y2 (RK2) – Control signal Y3 (RK3) – External demand — When CO1 → F18 - 1 – ZP speed — When CO4 → F25 - 1 – Outdoor temperature — When CO5 → F23 - 1 Direction 'Output'

System 12.1

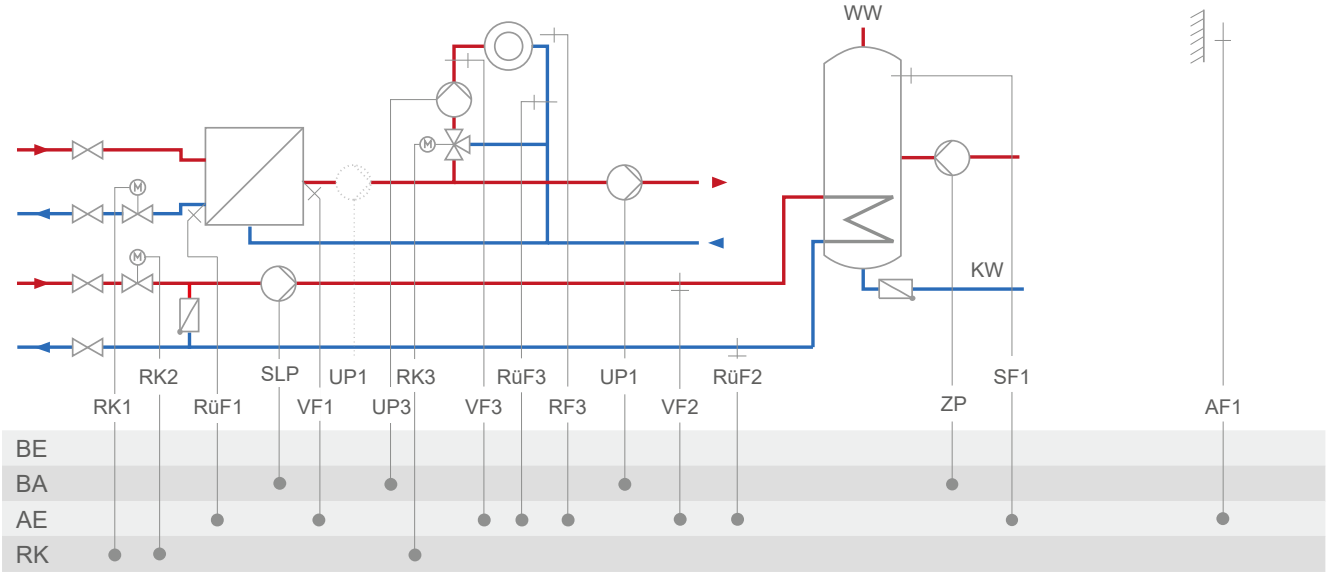

System	12.1
	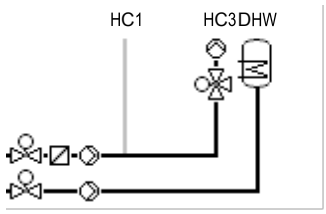
RK3: CO3 → F02 - 0 = Fixed set point control; CO3 → F02 - 1, select AF1 = Outdoor-temperature-compensated control with AF1; CO3→ F02 - 1, select AF2 = Outdoor-temperature-compensated control with AF2	
Default setting	
CO1 → F02	- 1 (with AF1)
CO1 → F03	- 1 (with RüF1)
CO3 → F01	- 0 (without RF3)
CO3 → F02	- 1 (with AF1)
CO3 → F03	- 0 (without RüF3)
CO4 → F01	- 1 (with SF1)
CO4 → F02	- 0 (without SF2)
CO4 → F03	- 0 (without RüF2)
CO5 → F14	- 0 (UP1 only active during the processing for an external demand)
CO5 → F34, F35, F36, F37	Function AA1, AA2, AA3, AA4: – Control signal Y1 (RK1) – Control signal Y2 (RK2) – Control signal Y3 (RK3) – External demand — When CO1 → F18 - 1 – SLP speed — When CO4 → F21 - 1 – ZP speed — When CO4 → F25 - 1 – Outdoor temperature — When CO5 → F23 - 1 Direction 'Output'

System 12.2-1

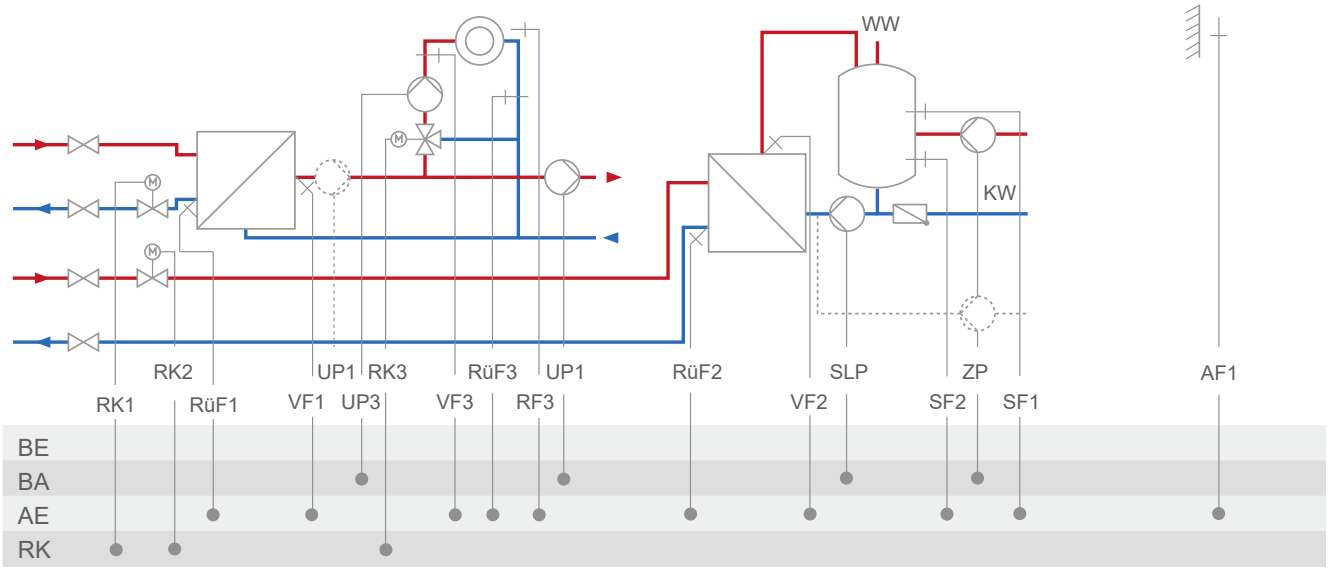

System	12.2-1
	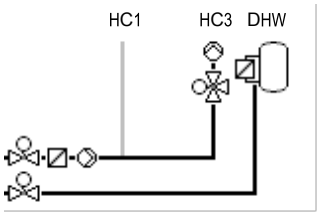
RK3: CO3 → F02 - 0 = Fixed set point control; CO3 → F02 - 1, select AF1 = Outdoor-temperature-compensated control with AF1; CO3→ F02 - 1, select AF2 = Outdoor-temperature-compensated control with AF2	
Default setting	
CO1 → F02	- 1 (with AF1)
CO1 → F03	- 1 (with RüF1)
CO3 → F01	- 0 (without RF3)
CO3 → F02	- 1 (with AF1)
CO3 → F03	- 0 (without RüF3)
CO4 → F01	- 1 (with SF1)
CO4 → F02	- 1 (with SF2)
CO4 → F03	- 0 (without RüF2)
CO4 → F10	- 0 (DHW circulation return in storage tank)
CO5 → F14	- 0 (UP1 only active during the processing for an external demand)
CO5 → F34, F35, F36, F37	Function AA1, AA2, AA3, AA4: – Control signal Y1 (RK1) – Control signal Y2 (RK2) – Control signal Y3 (RK3) – External demand — When CO1 → F18 - 1 – SLP speed — When CO4 → F21 - 1 – ZP speed — When CO4 → F25 - 1 – Outdoor temperature — When CO5 → F23 - 1 Direction 'Output'

System 12.2-2

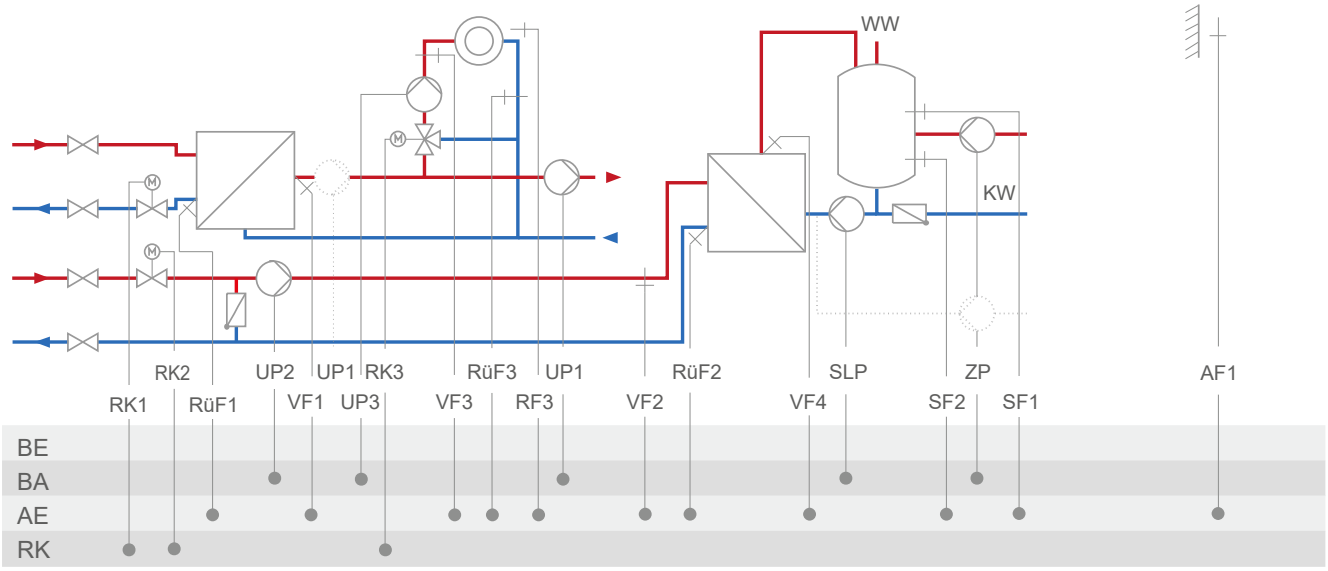

System	12.2-2
	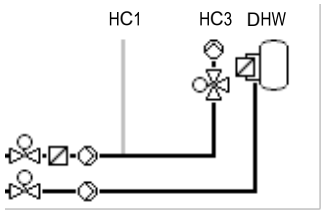
RK3: CO3 → F02 - 0 = Fixed set point control; CO3 → F02 - 1, select AF1 = Outdoor-temperature-compensated control with AF1; CO3→ F02 - 1, select AF2 = Outdoor-temperature-compensated control with AF2	
Default setting	
CO1 → F02	- 1 (with AF1)
CO1 → F03	- 1 (with RüF1)
CO3 → F01	- 0 (without RF3)
CO3 → F02	- 1 (with AF1)
CO3 → F03	- 0 (without RüF3)
CO4 → F01	- 1 (with SF1)
CO4 → F02	- 1 (with SF2)
CO4 → F03	- 0 (without RüF2)
CO4 → F05	- 0 (without VF4; in this case, VF2 usually installed at the point of measurement of VF4)
CO4 → F10	- 0 (DHW circulation return in storage tank)
CO5 → F14	- 0 (UP1 only active during the processing for an external demand)
CO5 → F34, F35, F36, F37	Function AA1, AA2, AA3, AA4: – Control signal Y1 (RK1) – Control signal Y2 (RK2) – Control signal Y3 (RK3) – External demand — When CO1 → F18 - 1 – SLP speed — When CO4 → F21 - 1 – ZP speed — When CO4 → F25 - 1 – Outdoor temperature — When CO5 → F23 - 1 Direction 'Output'

System 12.9-1

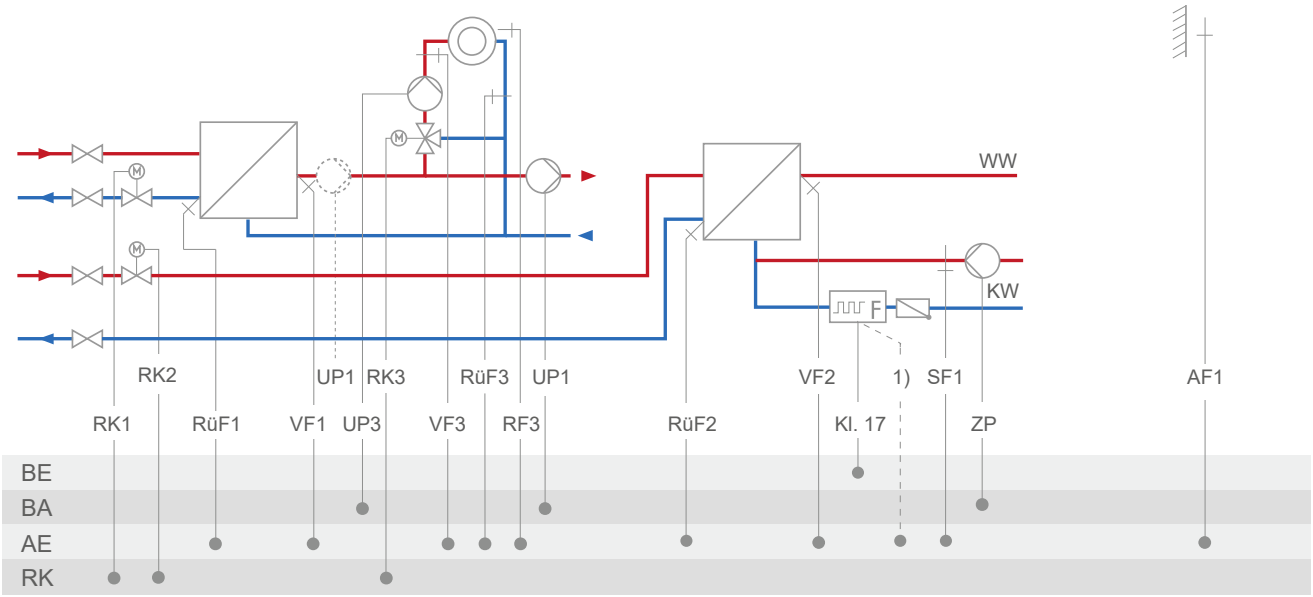

1) bei Vortex-Sensor Kl. 15, 16 oder 17

System	12.9-1
	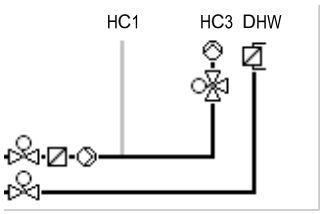
RK3: CO3 → F02 - 0 = Fixed set point control; CO3 → F02 - 1, select AF1 = Outdoor-temperature-compensated control with AF1; CO3→ F02 - 1, select AF2 = Outdoor-temperature-compensated control with AF2	
Default setting	
CO1 → F02	- 1 (with AF1)
CO1 → F03	- 1 (with RüF1)
CO3 → F01	- 0 (without RF3)
CO3 → F02	- 1 (with AF1)
CO3 → F03	- 0 (without RüF3)
CO4 → F01	- 0 (without SF1)
CO4 → F03	- 0 (without RüF2)
CO4 → F04	- 0 (without water flow sensor)
CO5 → F07	- 0 (without error message at terminal 37)
CO5 → F14	- 0 (UP1 only active during the processing for an external demand)
CO5 → F34, F35, F36, F37	Function AA1, AA2, AA3, AA4: – Control signal Y1 (RK1) – Control signal Y2 (RK2) – Control signal Y3 (RK3) – 5 V supply – 10 V supply – External demand — When CO1 → F18 - 1 – ZP speed — When CO4 → F25 - 1 – Outdoor temperature — When CO5 → F23 - 1 Direction 'Output'

System 12.9-2

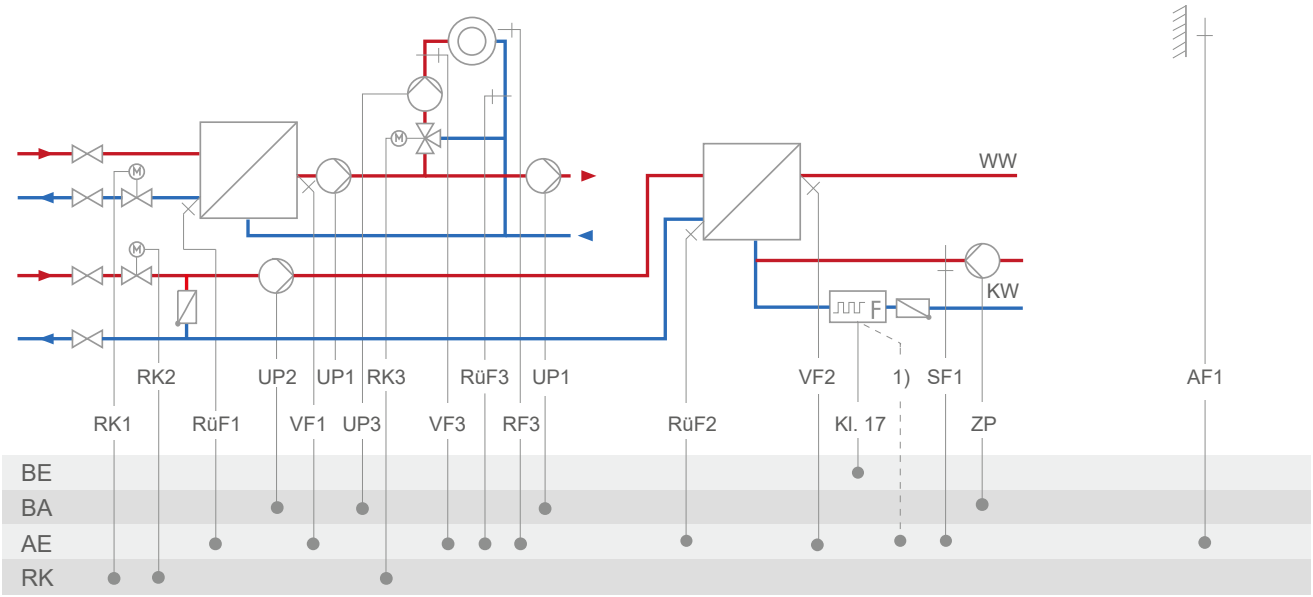

1) bei Vortex-Sensor Kl. 15, 16 oder 17

System	12.9-2
	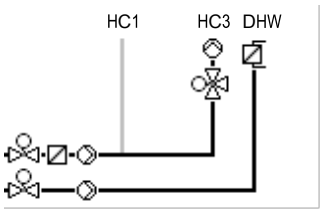
RK3: CO3 → F02 - 0 = Fixed set point control; CO3 → F02 - 1, select AF1 = Outdoor-temperature-compensated control with AF1; CO3→ F02 - 1, select AF2 = Outdoor-temperature-compensated control with AF2	
Default setting	
CO1 → F02	- 1 (with AF1)
CO1 → F03	- 1 (with RüF1)
CO3 → F01	- 0 (without RF3)
CO3 → F02	- 1 (with AF1)
CO3 → F03	- 0 (without RüF3)
CO4 → F01	- 0 (without SF1)
CO4 → F03	- 0 (without RüF2)
CO4 → F04	- 0 (without water flow sensor)
CO5 → F07	- 0 (without error message at terminal 37)
CO5 → F14	- 0 (UP1 only active during the processing for an external demand)
CO5 → F34, F35, F36, F37	Function AA1, AA2, AA3, AA4: – Control signal Y1 (RK1) – Control signal Y2 (RK2) – Control signal Y3 (RK3) – 5 V supply – 10 V supply – External demand — When CO1 → F18 - 1 – ZP speed — When CO4 → F25 - 1 – Outdoor temperature — When CO5 → F23 - 1 Direction 'Output'

System 13.0

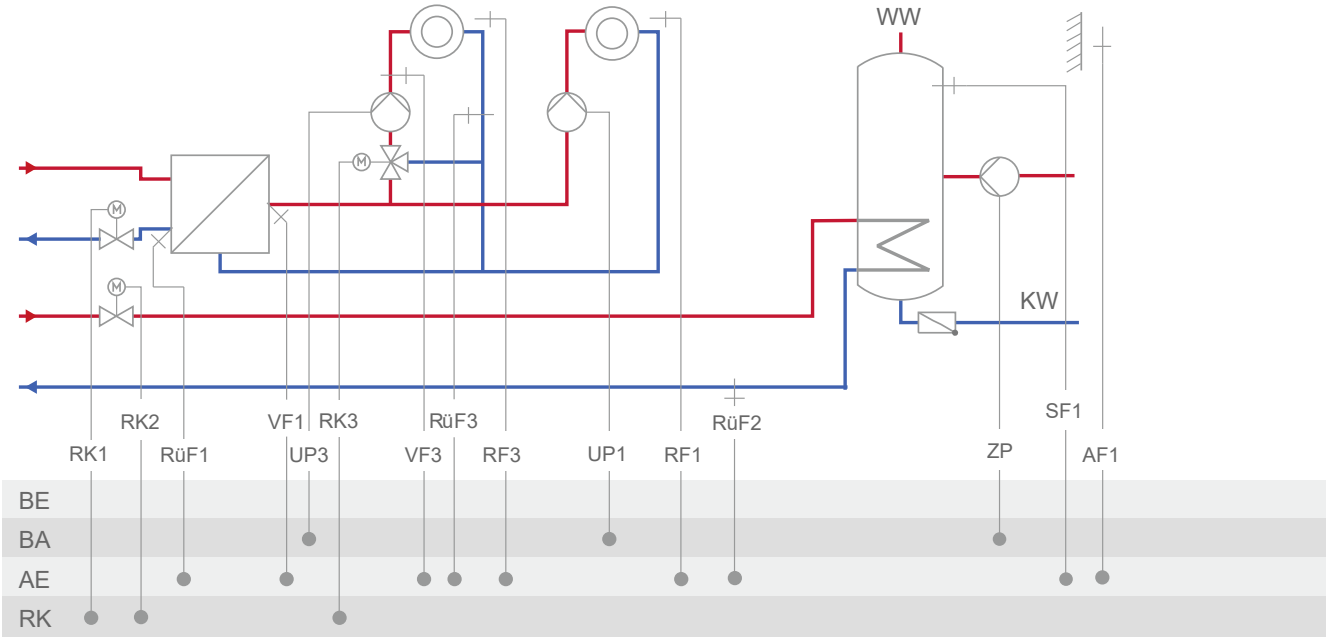

System	13.0
	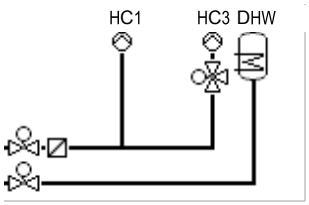
RK3: CO3 → F02 - 0 = Fixed set point control; CO3 → F02 - 1, select AF1 = Outdoor-temperature-compensated control with AF1; CO3→ F02 - 1, select AF2 = Outdoor-temperature-compensated control with AF2	
Default setting	
CO1 → F01	- 0 (without RF1)
CO1 → F02	- 1 (with AF1)
CO1 → F03	- 1 (with RüF1)
CO3 → F01	- 0 (without RF3)
CO3 → F02	- 1 (with AF1)
CO3 → F03	- 0 (without RüF3)
CO4 → F03	- 0 (without RüF2)
CO5 → F07	- 0 (without error message at terminal 37)
CO5 → F34, F35, F36, F37	Function AA1, AA2, AA3, AA4: – Control signal Y1 (RK1) – Control signal Y2 (RK2) – Control signal Y3 (RK3) – External demand — When CO1 → F18 - 1 – ZP speed — When CO4 → F25 - 1 – Outdoor temperature — When CO5 → F23 - 1 Direction 'Output'

System 13.1

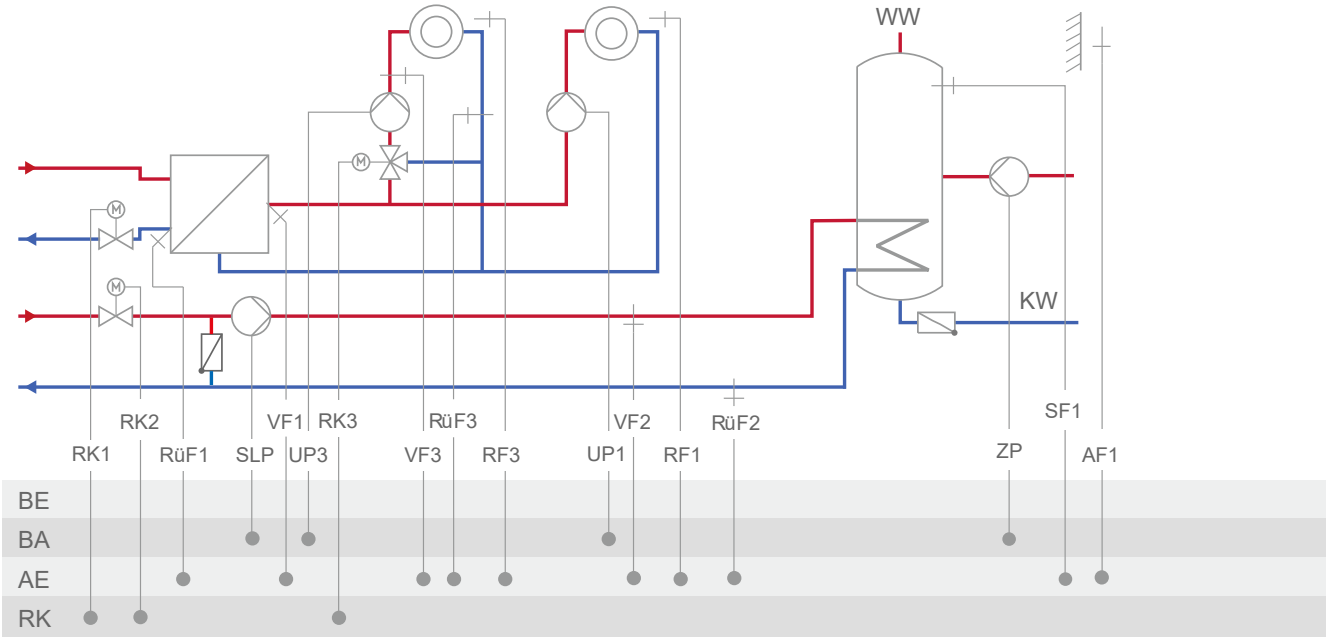

System	13.1
	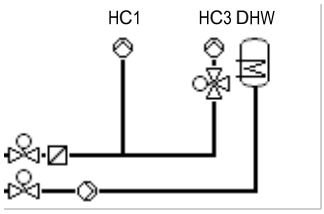
RK3: CO3 → F02 - 0 = Fixed set point control; CO3 → F02 - 1, select AF1 = Outdoor-temperature-compensated control with AF1; CO3→ F02 - 1, select AF2 = Outdoor-temperature-compensated control with AF2	
Default setting	
CO1 → F01	- 0 (without RF1)
CO1 → F02	- 1 (with AF1)
CO1 → F03	- 1 (with RüF1)
CO3 → F01	- 0 (without RF3)
CO3 → F02	- 1 (with AF1)
CO3 → F03	- 0 (without RüF3)
CO4 → F01	- 1 (with SF1)
CO4 → F02	- 0 (without SF2)
CO4 → F03	- 0 (without RüF2)
CO5 → F34, F35, F36, F37	Function AA1, AA2, AA3, AA4: – Control signal Y1 (RK1) – Control signal Y2 (RK2) – Control signal Y3 (RK3) – External demand — When CO1 → F18 - 1 – SLP speed — When CO4 → F21 - 1 – ZP speed — When CO4 → F25 - 1 – Outdoor temperature — When CO5 → F23 - 1 Direction 'Output'

System 13.2-1

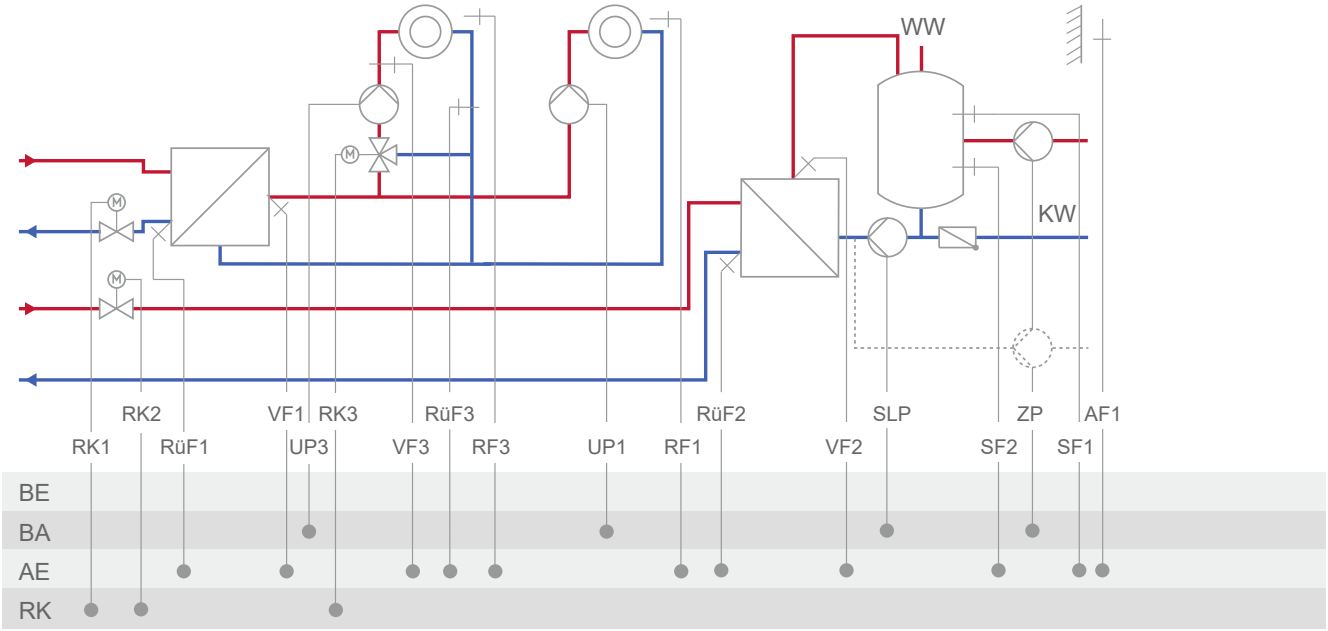

System	13.2-1
	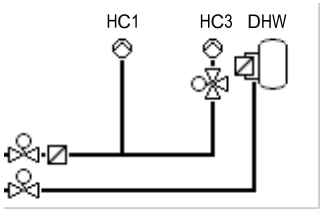
RK3: CO3 → F02 - 0 = Fixed set point control; CO3 → F02 - 1, select AF1 = Outdoor-temperature-compensated control with AF1; CO3→ F02 - 1, select AF2 = Outdoor-temperature-compensated control with AF2	
Default setting	
CO1 → F01	- 0 (without RF1)
CO1 → F02	- 1 (with AF1)
CO1 → F03	- 1 (with RüF1)
CO3 → F01	- 0 (without RF3)
CO3 → F02	- 1 (with AF1)
CO3 → F03	- 0 (without RüF3)
CO4 → F01	- 1 (with SF1)
CO4 → F02	- 1 (with SF2)
CO4 → F03	- 0 (without RüF2)
CO4 → F04	- 0 (without water flow sensor)
CO4 → F10	- 0 (DHW circulation return in storage tank)
CO5 → F34, F35, F36, F37	Function AA1, AA2, AA3, AA4: – Control signal Y1 (RK1) – Control signal Y2 (RK2) – Control signal Y3 (RK3) – External demand — When CO1 → F18 - 1 – SLP speed — When CO4 → F21 - 1 – ZP speed — When CO4 → F25 - 1 – Outdoor temperature — When CO5 → F23 - 1 Direction 'Output'

System 13.2-2

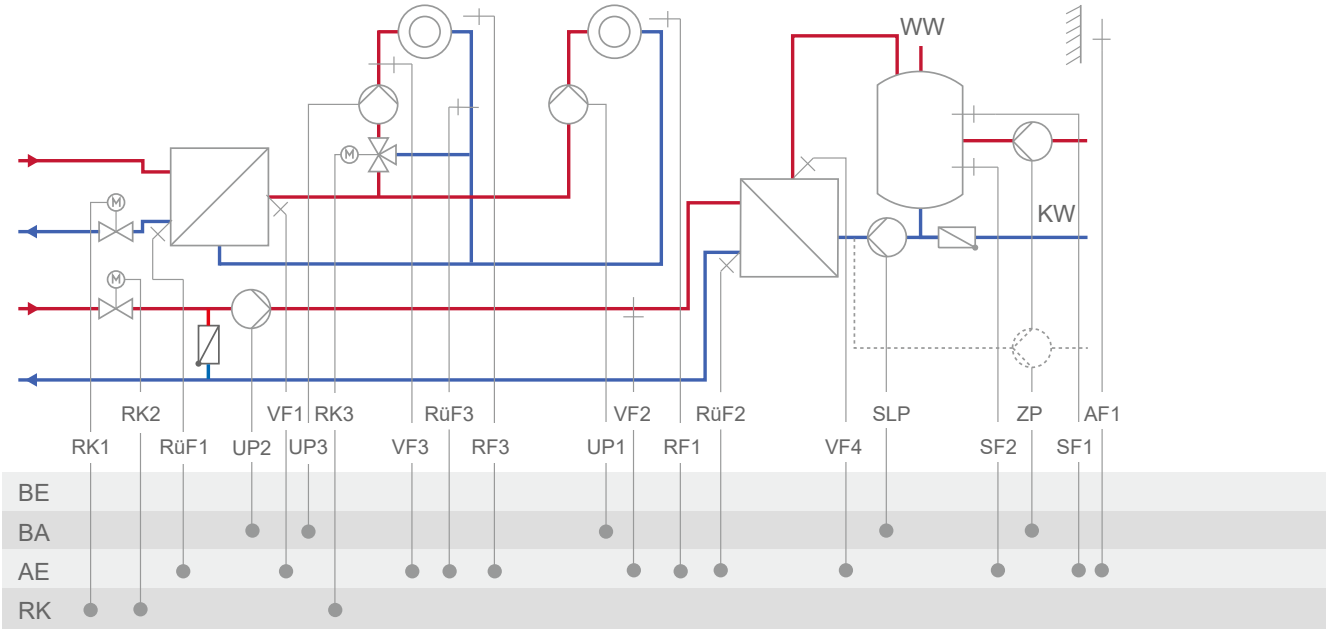
WW
KW
RK2
VF1
RK3
RüF3
VF2
RüF2
SLP
ZP
AF1
RK1
RüF1
UP2
UP3
VF3
RF3
UP1
RF1
VF4
SF2
SF1
BE
BA
AE
RK

System	**13.2-2**
	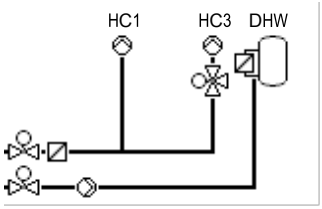
RK3: CO3 → F02 - 0 = Fixed set point control; CO3 → F02 - 1, select AF1 = Outdoor-temperature-compensated control with AF1; CO3→ F02 - 1, select AF2 = Outdoor-temperature-compensated control with AF2	
Default setting	
CO1 → F01	- 0 (without RF1)
CO1 → F02	- 1 (with AF1)
CO1 → F03	- 1 (with RüF1)
CO3 → F01	- 0 (without RF3)
CO3 → F02	- 1 (with AF1)
CO3 → F03	- 0 (without RüF3)
CO4 → F01	- 1 (with SF1)
CO4 → F02	- 1 (with SF2)
CO4 → F03	- 0 (without RüF2)
CO4 → F04	- 0 (without water flow sensor)
CO4 → F05	- 0 (without VF4; in this case, VF2 usually installed at the point of measurement of VF4)
CO4 → F10	- 0 (DHW circulation return in storage tank)
CO5 → F34, F35, F36, F37	Function AA1, AA2, AA3, AA4: – Control signal Y1 (RK1) – Control signal Y2 (RK2) – Control signal Y3 (RK3) – External demand — When CO1 → F18 - 1 – SLP speed — When CO4 → F21 - 1 – ZP speed — When CO4 → F25 - 1 – Outdoor temperature — When CO5 → F23 - 1 Direction 'Output'

System 13.6-1

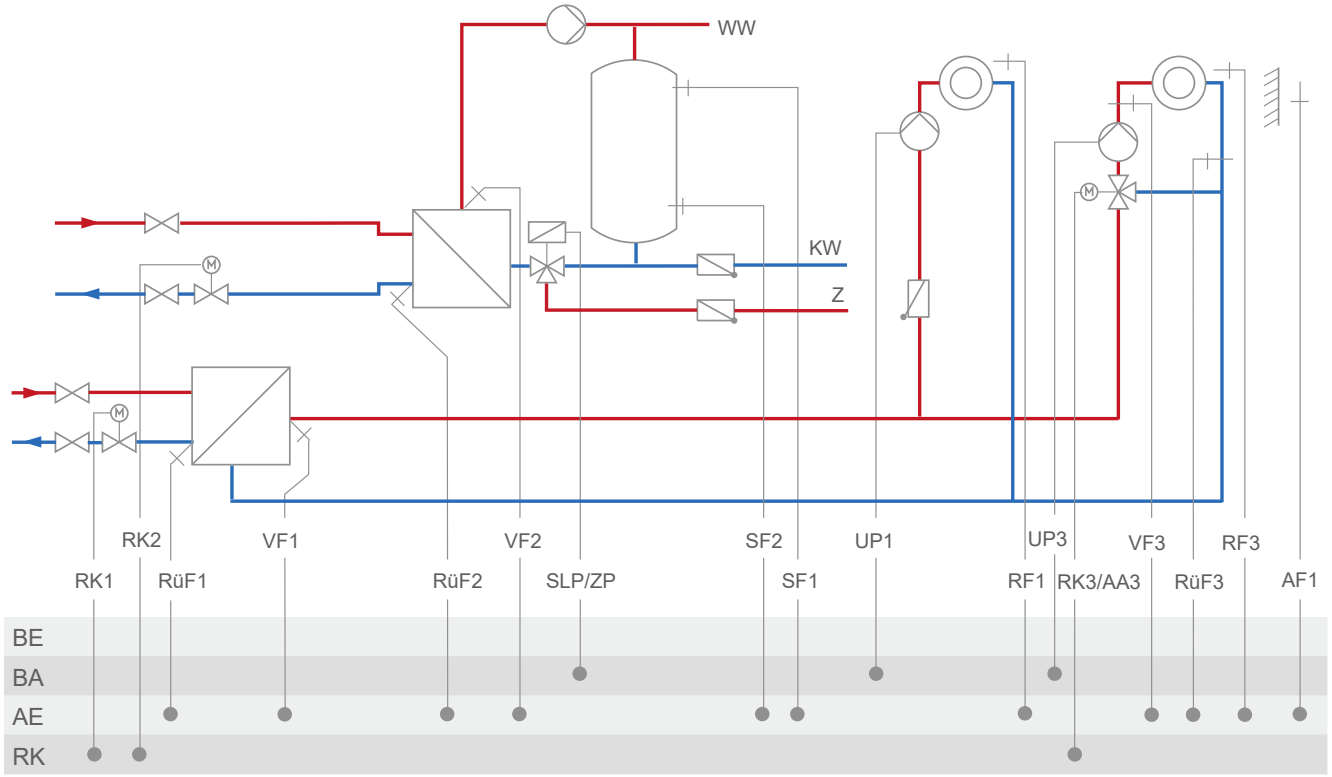
WW
KW
Z
RK2
VF1
VF2
SF2
UP1
UP3
VF3
RF3
RK1
RüF1
RüF2
SLP/ZP
SF1
RF1
RK3/AA3
RüF3
AF1
BE
BA
AE
RK

System	**13.6-1**
	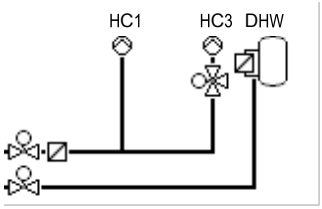
RK3: CO3 → F02 - 0 = Fixed set point control; CO3 → F02 - 1, select AF1 = Outdoor-temperature-compensated control with AF1; CO3→ F02 - 1, select AF2 = Outdoor-temperature-compensated control with AF2	
Note:	Install a continuously running pump in the DHW circuit and connect it directly to the supply voltage.
Default setting	
CO1 → F01	- 0 (without RF1)
CO1 → F02	- 1 (with AF1)
CO3 → F01	- 0 (without RF3)
CO3 → F02	- 1 (with AF1)
CO3 → F03	- 0 (without RüF3)
CO4 → F01	- 1 (with SF1)
CO4 → F02	- 1 (with SF2)
CO4 → F03	- 0 (without RüF2)
CO5 → F34, F35, F36, F37	Function AA1, AA2, AA3, AA4: – Control signal Y1 (RK1) – Control signal Y2 (RK2) – Control signal Y3 (RK3) – External demand — When CO1 → F18 - 1 – Outdoor temperature — When CO5 → F23 - 1 Direction 'Output'

System 13.6-2

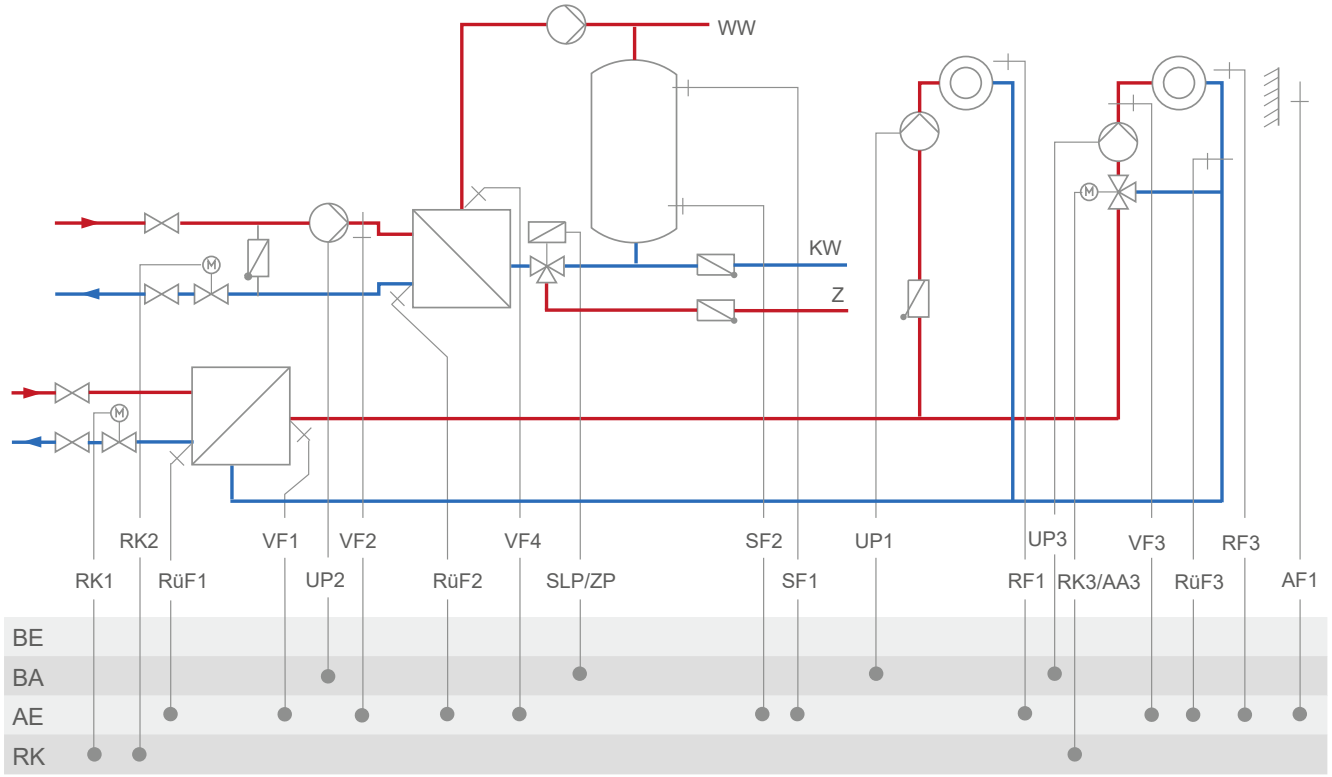
WW
KW
Z
RK2
VF1
VF2
VF4
SF2
UP1
UP3
VF3
RF3
RK1
RüF1
UP2
RüF2
SLP/ZP
SF1
RF1
RK3/AA3
RüF3
AF1
BE
BA
AE
RK

System	**13.6-2**
	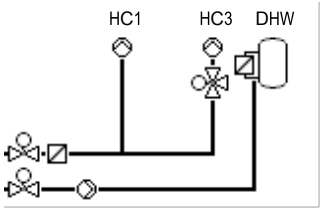
RK3: CO3 → F02 - 0 = Fixed set point control; CO3 → F02 - 1, select AF1 = Outdoor-temperature-compensated control with AF1; CO3→ F02 - 1, select AF2 = Outdoor-temperature-compensated control with AF2	
Note:	Install a continuously running pump in the DHW circuit and connect it directly to the supply voltage.
Default setting	
CO1 → F01	- 0 (without RF1)
CO1 → F02	- 1 (with AF1)
CO3 → F01	- 0 (without RF3)
CO3 → F02	- 1 (with AF1)
CO3 → F03	- 0 (without RüF3)
CO4 → F01	- 1 (with SF1)
CO4 → F02	- 1 (with SF2)
CO4 → F03	- 0 (without RüF2)
CO4 → F05	- 0 (without VF4; in this case, VF2 usually installed at the point of measurement of VF4)
CO5 → F34, F35, F36, F37	Function AA1, AA2, AA3, AA4: – Control signal Y1 (RK1) – Control signal Y2 (RK2) – Control signal Y3 (RK3) – External demand — When CO1 → F18 - 1 – Outdoor temperature — When CO5 → F23 - 1 Direction 'Output'

System 13.9-1

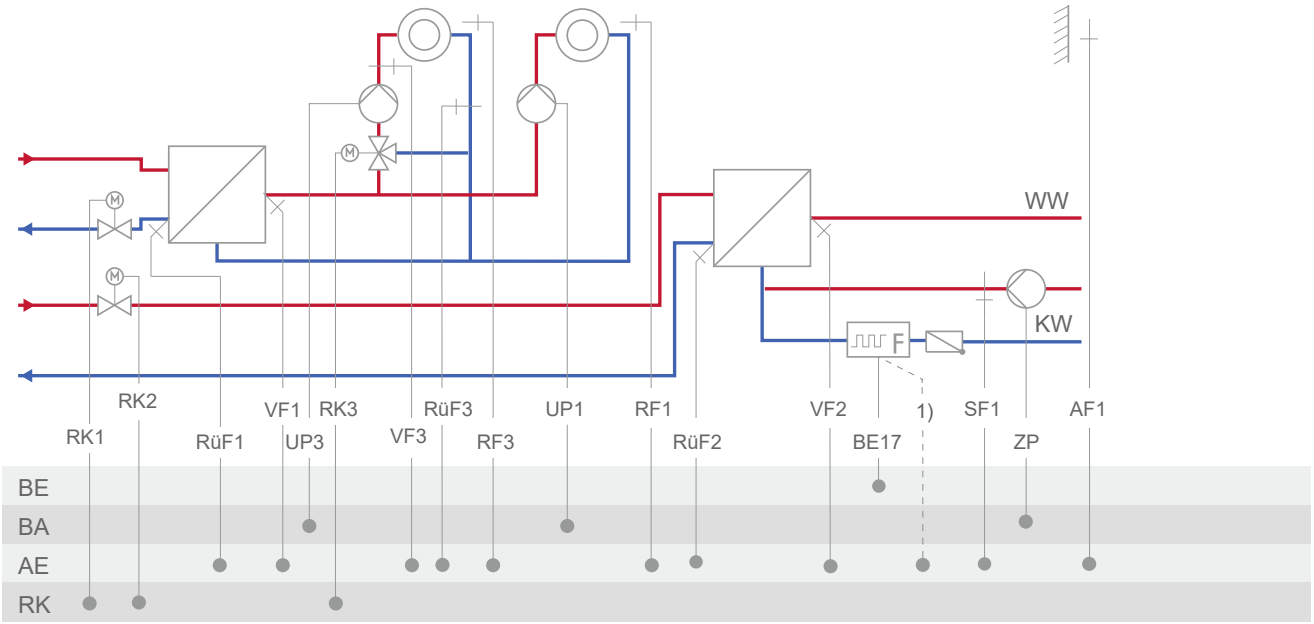

1) bei Vortex-Sensor Kl. 15, 16 oder 17

System	**13.9-1**
	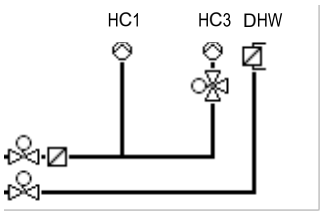
RK3: CO3 → F02 - 0 = Fixed set point control; CO3 → F02 - 1, select AF1 = Outdoor-temperature-compensated control with AF1; CO3→ F02 - 1, select AF2 = Outdoor-temperature-compensated control with AF2	
Default setting	
CO1 → F01	- 0 (without RF1)
CO1 → F02	- 1 (with AF1)
CO1 → F03	- 1 (with RüF1)
CO3 → F01	- 0 (without RF3)
CO3 → F02	- 1 (with AF1)
CO3 → F03	- 0 (without RüF3)
CO4 → F01	- 0 (without SF1)
CO4 → F03	- 0 (without RüF2)
CO4 → F04	- 0 (without water flow sensor)
CO5 → F07	- 0 (without error message at terminal 37)
CO5 → F34, F35, F36, F37	Function AA1, AA2, AA3, AA4: – Control signal Y1 (RK1) – Control signal Y2 (RK2) – Control signal Y3 (RK3) – 5 V supply – 10 V supply – External demand — When CO1 → F18 - 1 – ZP speed — When CO4 → F25 - 1 – Outdoor temperature — When CO5 → F23 - 1 Direction 'Output'

System 13.9-2

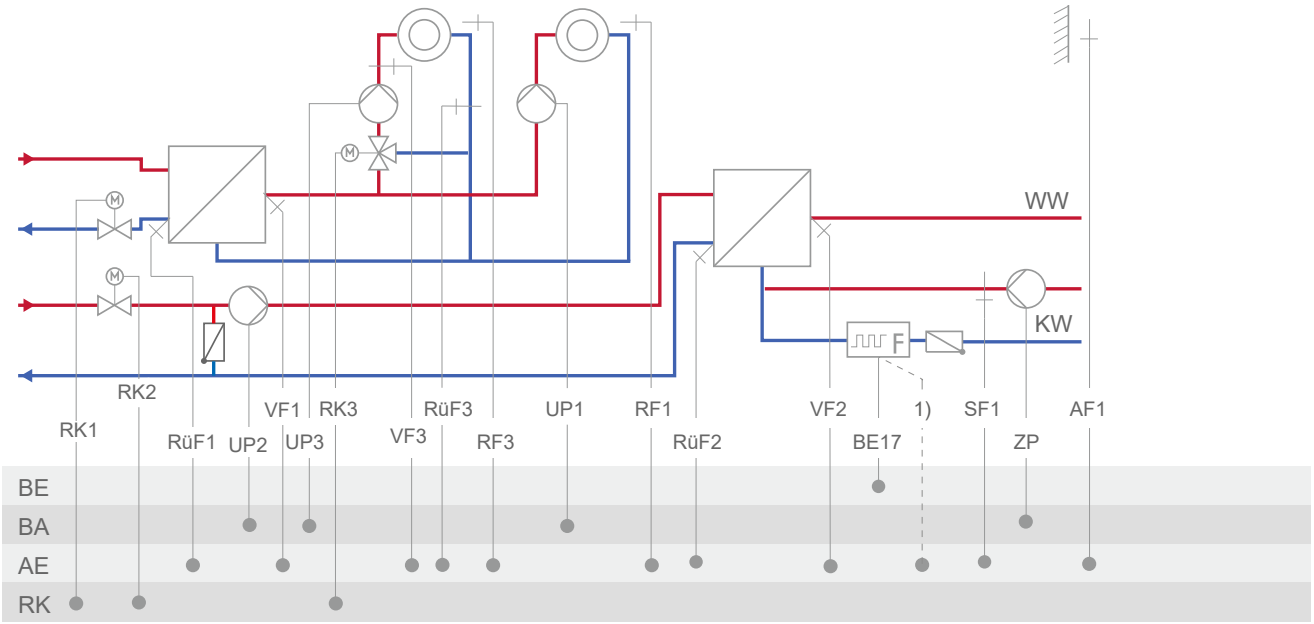

1) bei Vortex-Sensor Kl. 15, 16 oder 17

System	**13.9-2**
	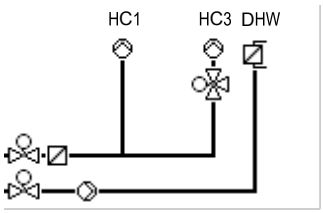
RK3: CO3 → F02 - 0 = Fixed set point control; CO3 → F02 - 1, select AF1 = Outdoor-temperature-compensated control with AF1; CO3→ F02 - 1, select AF2 = Outdoor-temperature-compensated control with AF2	
Default setting	
CO1 → F01	- 0 (without RF1)
CO1 → F02	- 1 (with AF1)
CO1 → F03	- 1 (with RüF1)
CO3 → F01	- 0 (without RF3)
CO3 → F02	- 1 (with AF1)
CO3 → F03	- 0 (without RüF3)
CO4 → F01	- 0 (without SF1)
CO4 → F03	- 0 (without RüF2)
CO4 → F04	- 0 (without water flow sensor)
CO5 → F07	- 0 (without error message at terminal 37)
CO5 → F34, F35, F36, F37	Function AA1, AA2, AA3, AA4: – Control signal Y1 (RK1) – Control signal Y2 (RK2) – Control signal Y3 (RK3) – 5 V supply – 10 V supply – External demand — When CO1 → F18 - 1 – ZP speed — When CO4 → F25 - 1 – Outdoor temperature — When CO5 → F23 - 1 Direction 'Output'

System 14.1

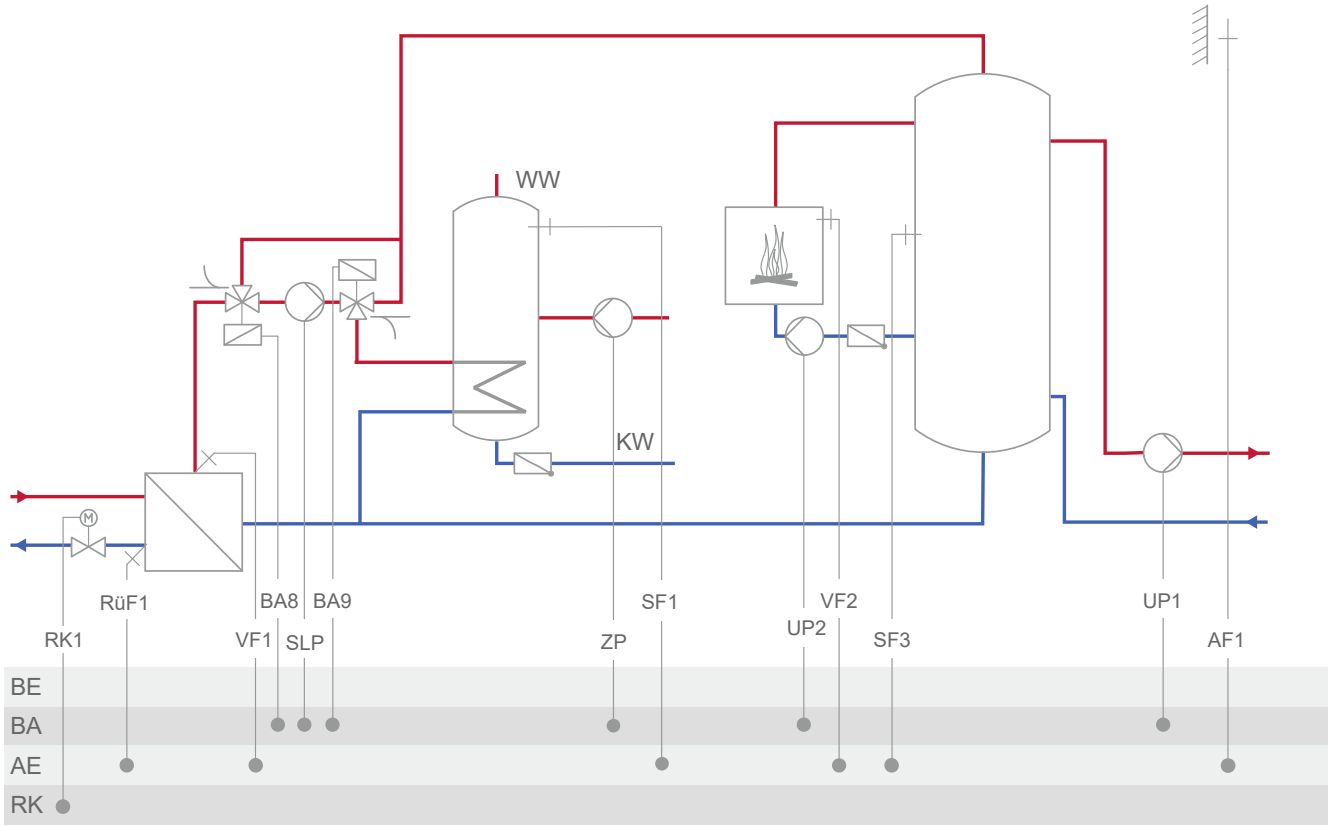

System	14.1
	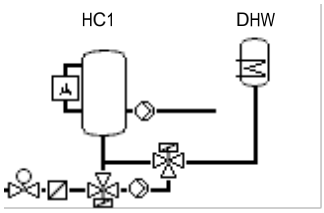
Default setting	
CO1 → F02	- 1 (with AF1)
CO1 → F03	- 1 (with RüF1)
CO4 → F01	- 1 (with SF1)
CO4 → F02	- 0 (without SF2)
CO5 → F07	- 0 (without error message at terminal 46)
CO5 → F34, F35, F36, F37	Function AA1, AA2, AA3, AA4: – Control signal Y1 (RK1) – External demand — When CO1 → F18 - 1 – ZP speed — When CO4 → F25 - 1 – Outdoor temperature — When CO5 → F23 - 1 Direction 'Output'

System 14.2

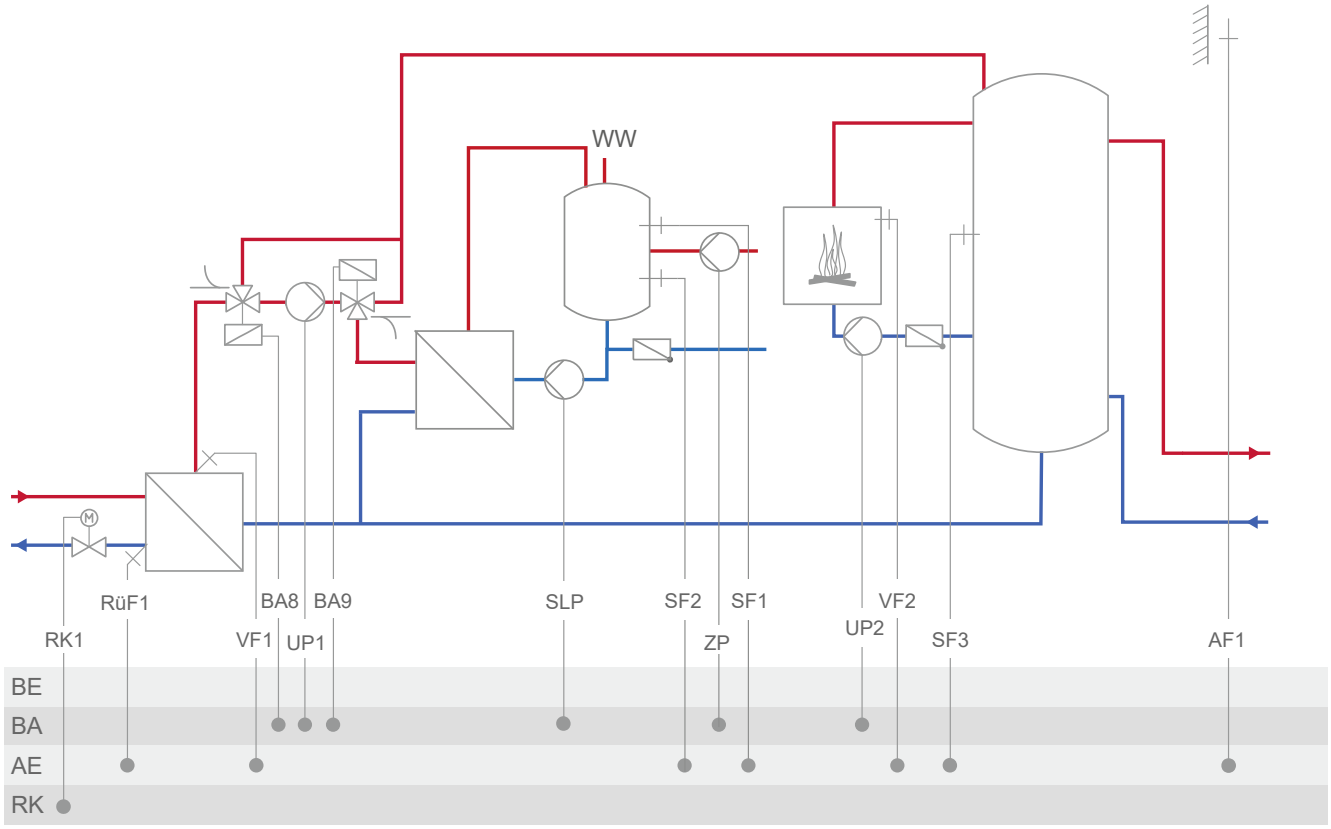

System	14.2
	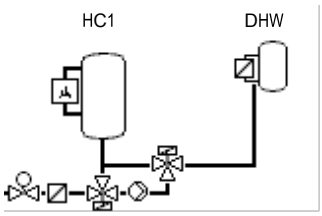
Default setting	
CO1 → F02	- 1 (with AF1)
CO1 → F03	- 1 (with RüF1)
CO4 → F01	- 1 (with SF1)
CO4 → F02	- 1 (with SF2)
CO5 → F07	- 0 (without error message at terminal 46)
CO5 → F34, F35, F36, F37	Function AA1, AA2, AA3, AA4: – Control signal Y1 (RK1) – External demand — When CO1 → F18 - 1 – SLP speed — When CO4 → F21 - 1 – ZP speed — When CO4 → F25 - 1 – Outdoor temperature — When CO5 → F23 - 1 Direction 'Output'

System 14.3

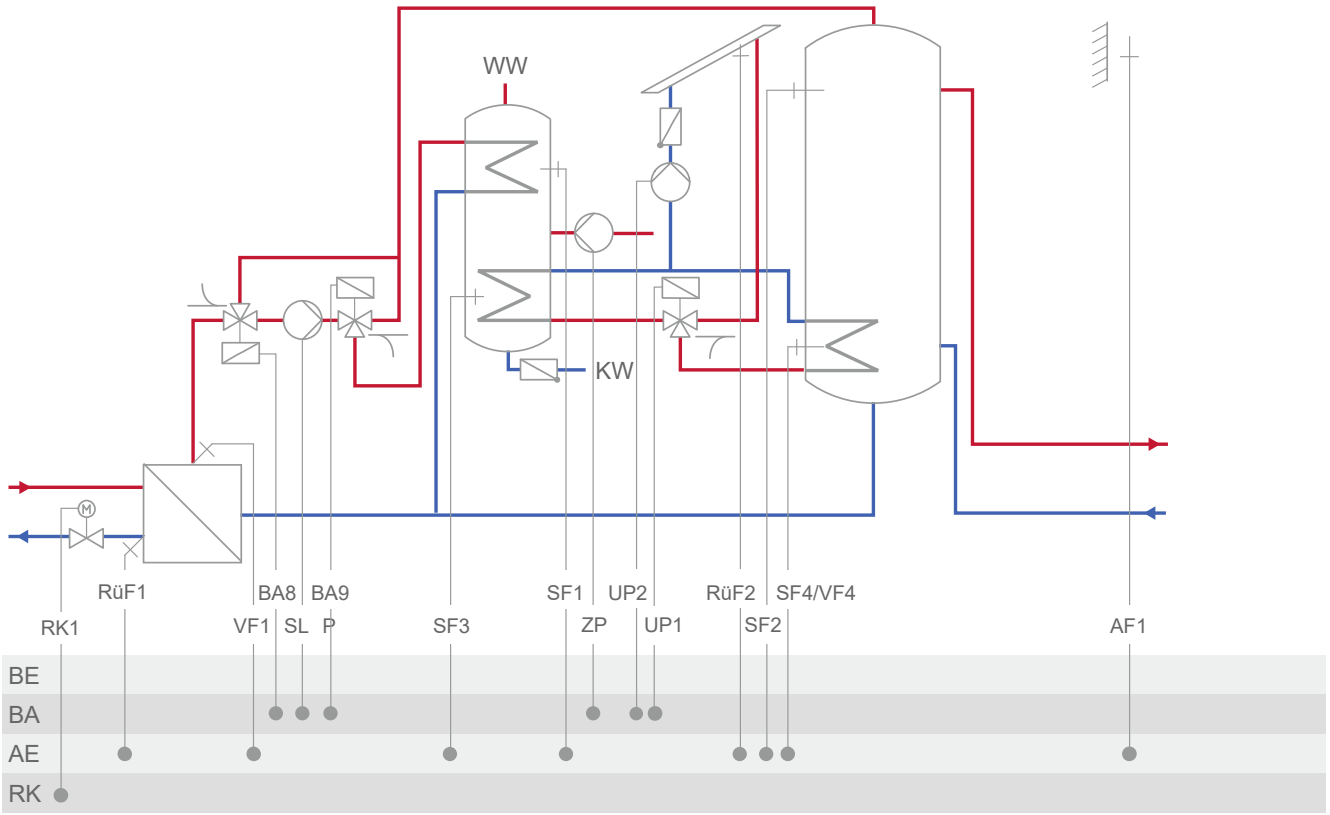

System	14.3
	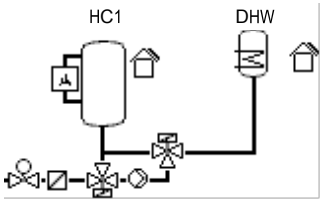
Default setting	
CO1 → F02	- 1 (with AF1)
CO1 → F03	- 1 (with RüF1)
CO4 → F01	- 1 (with SF1)
CO5 → F07	- 0 (without error message at terminal 46)
CO5 → F34, F35, F36, F37	Function AA1, AA2, AA3, AA4: – Control signal Y1 (RK1) – External demand — When CO1 → F18 - 1 – ZP speed — When CO4 → F25 - 1 – Outdoor temperature — When CO5 → F23 - 1 Direction 'Output'

System 15.0

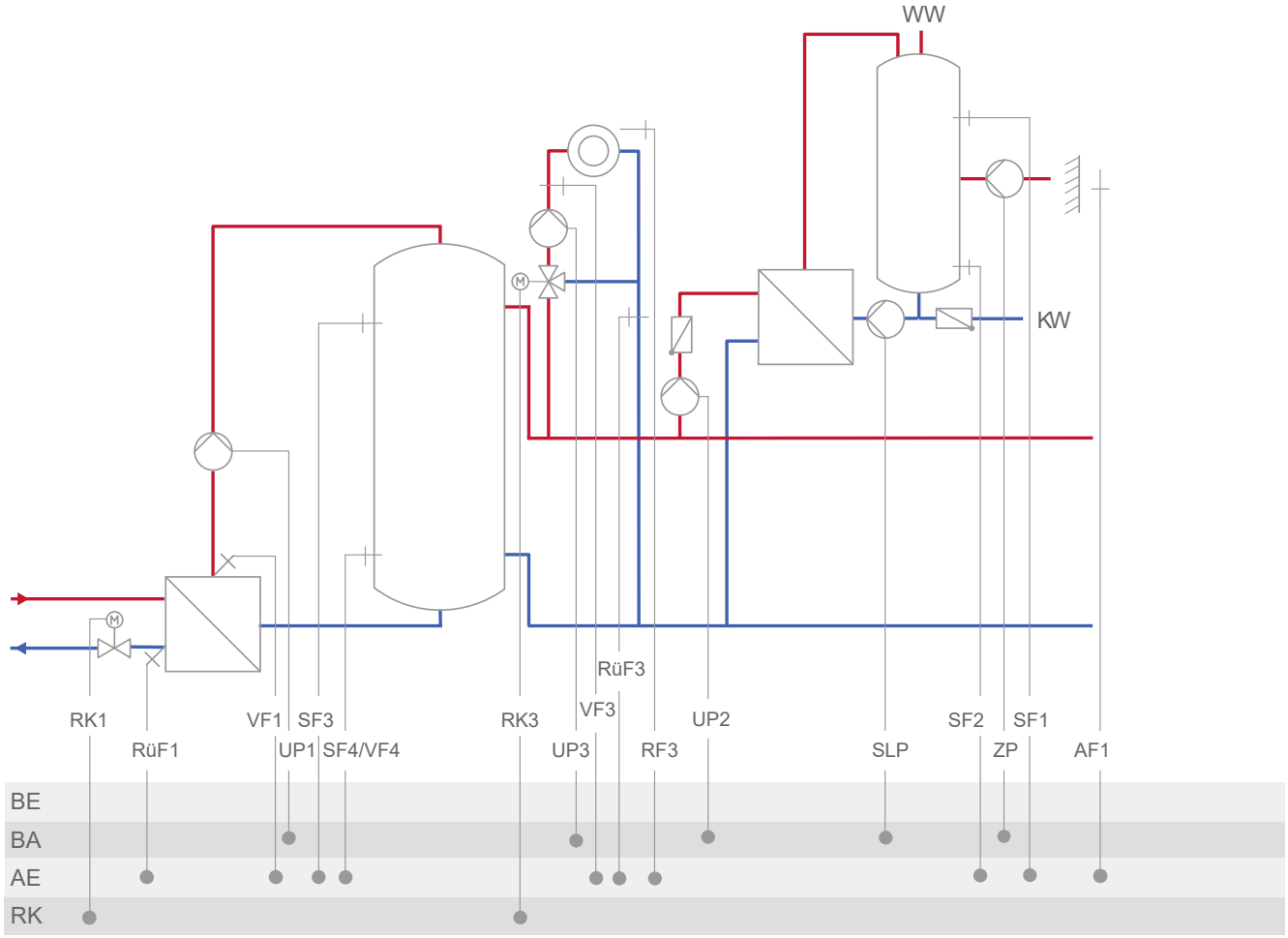
WW
KW
RK1
RüF1
VF1
UP1
SF3
SF4/VF4
RK3
VF3
RüF3
UP3
RF3
UP2
SLP
SF2
ZP
SF1
AF1
BE
BA
AE
RK

System	**15.0**
	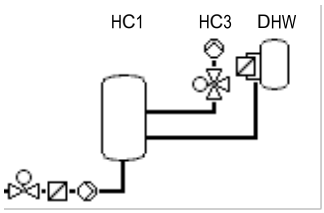
RK3: CO3 → F02 - 0 = Fixed set point control; CO3 → F02 - 1, select AF1 = Outdoor-temperature-compensated control with AF1; CO3→ F02 - 1, select AF2 = Outdoor-temperature-compensated control with AF2	
Default setting	
CO1 → F02	- 1 (with AF1)
CO1 → F03	- 1 (with RüF1)
CO3 → F01	- 0 (without RF3)
CO3 → F02	- 1 (with AF1)
CO3 → F03	- 0 (without RüF3)
CO4 → F01	- 1 (with SF1)
CO4 → F02	- 0 (without SF2)
CO5 → F07	- 0 (without error message at terminal 43)
CO5 → F34, F35, F36, F37	Function AA1, AA2, AA3, AA4: – Control signal Y1 (RK1) – Control signal Y3 (RK3) – External demand — When CO1 → F18 - 1 – SLP speed — When CO4 → F21 - 1 – ZP speed — When CO4 → F25 - 1 – Outdoor temperature — When CO5 → F23 - 1 Direction 'Output'

System 15.1

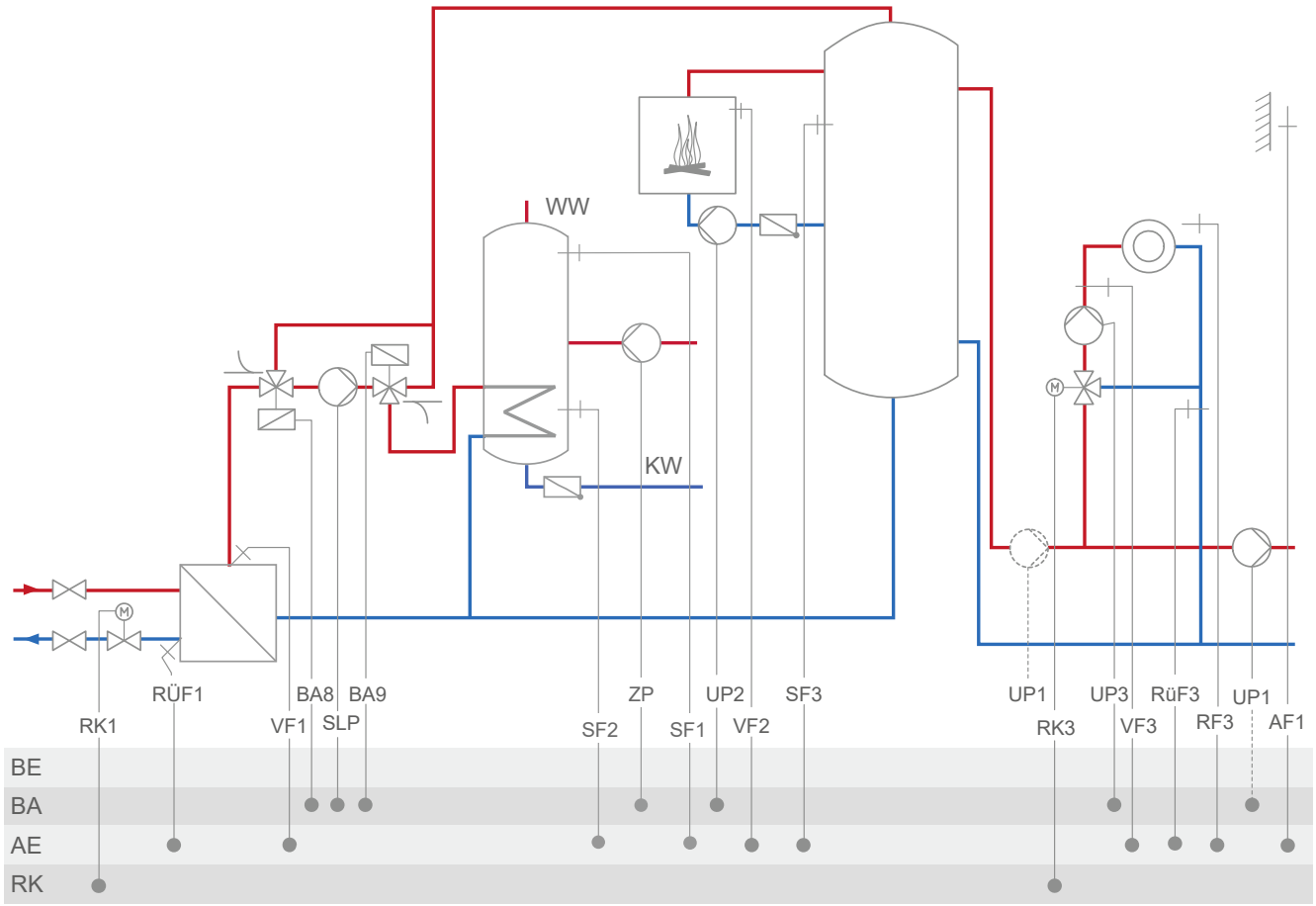
WW
KW
RÜF1
BA8
BA9
ZP
UP2
SF3
UP1
UP3
RüF3
UP1
RK1
VF1
SLP
SF2
SF1
VF2
RK3
VF3
RF3
AF1
BE
BA
AE
RK

System	**15.1**
	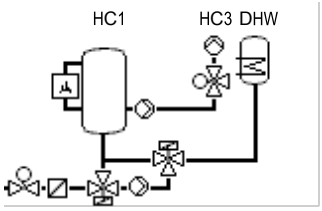
RK3: CO3 → F02 - 0 = Fixed set point control; CO3 → F02 - 1, select AF1 = Outdoor-temperature-compensated control with AF1; CO3→ F02 - 1, select AF2 = Outdoor-temperature-compensated control with AF2	
Default setting	
CO1 → F01	- 0 (without RF1)
CO1 → F02	- 1 (with AF1)
CO1 → F03	- 1 (with RüF1)
CO3 → F01	- 0 (without RF3)
CO3 → F02	- 1 (with AF1)
CO3 → F03	- 0 (without RüF3)
CO4 → F01	- 1 (with SF1)
CO4 → F02	- 0 (without SF2)
CO5 → F14	- 0 (UP1 only active during the processing for an external demand)
CO5 → F34, F35, F36, F37	Function AA1, AA2, AA3, AA4: – Control signal Y1 (RK1) – Control signal Y3 (RK3) – External demand — When CO1 → F18 - 1 – ZP speed — When CO4 → F25 - 1 – Outdoor temperature — When CO5 → F23 - 1 Direction 'Output'

System 15.2

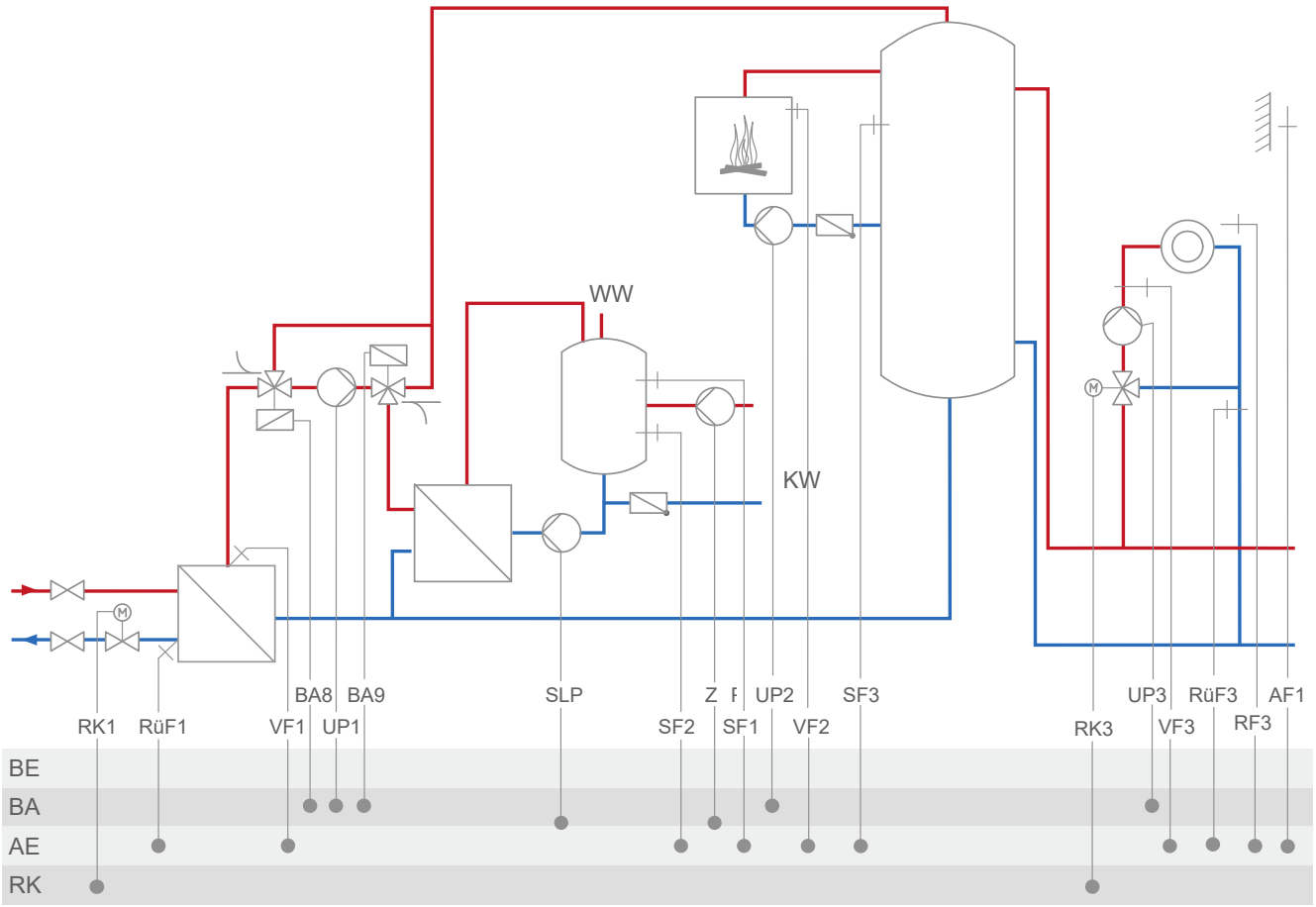
WW
KW
RK1
RüF1
BA8
BA9
VF1
UP1
SLP
SF2
Z
SF1
UP2
VF2
SF3
RK3
UP3
VF3
RüF3
RF3
AF1
BE
BA
AE
RK

System	**15.2**
	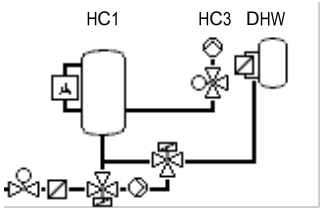
RK3: CO3 → F02 - 0 = Fixed set point control; CO3 → F02 - 1, select AF1 = Outdoor-temperature-compensated control with AF1; CO3→ F02 - 1, select AF2 = Outdoor-temperature-compensated control with AF2	
Default setting	
CO1 → F01	- 0 (without RF1)
CO1 → F02	- 1 (with AF1)
CO1 → F03	- 1 (with RüF1)
CO3 → F01	- 0 (without RF3)
CO3 → F02	- 1 (with AF1)
CO3 → F03	- 0 (without RüF3)
CO4 → F01	- 1 (with SF1)
CO4 → F02	- 1 (with SF2)
CO5 → F34, F35, F36, F37	Function AA1, AA2, AA3, AA4: – Control signal Y1 (RK1) – Control signal Y3 (RK3) – External demand — When CO1 → F18 - 1 – SLP speed — When CO4 → F21 - 1 – ZP speed — When CO4 → F25 - 1 – Outdoor temperature — When CO5 → F23 - 1 Direction 'Output'

System 15.3

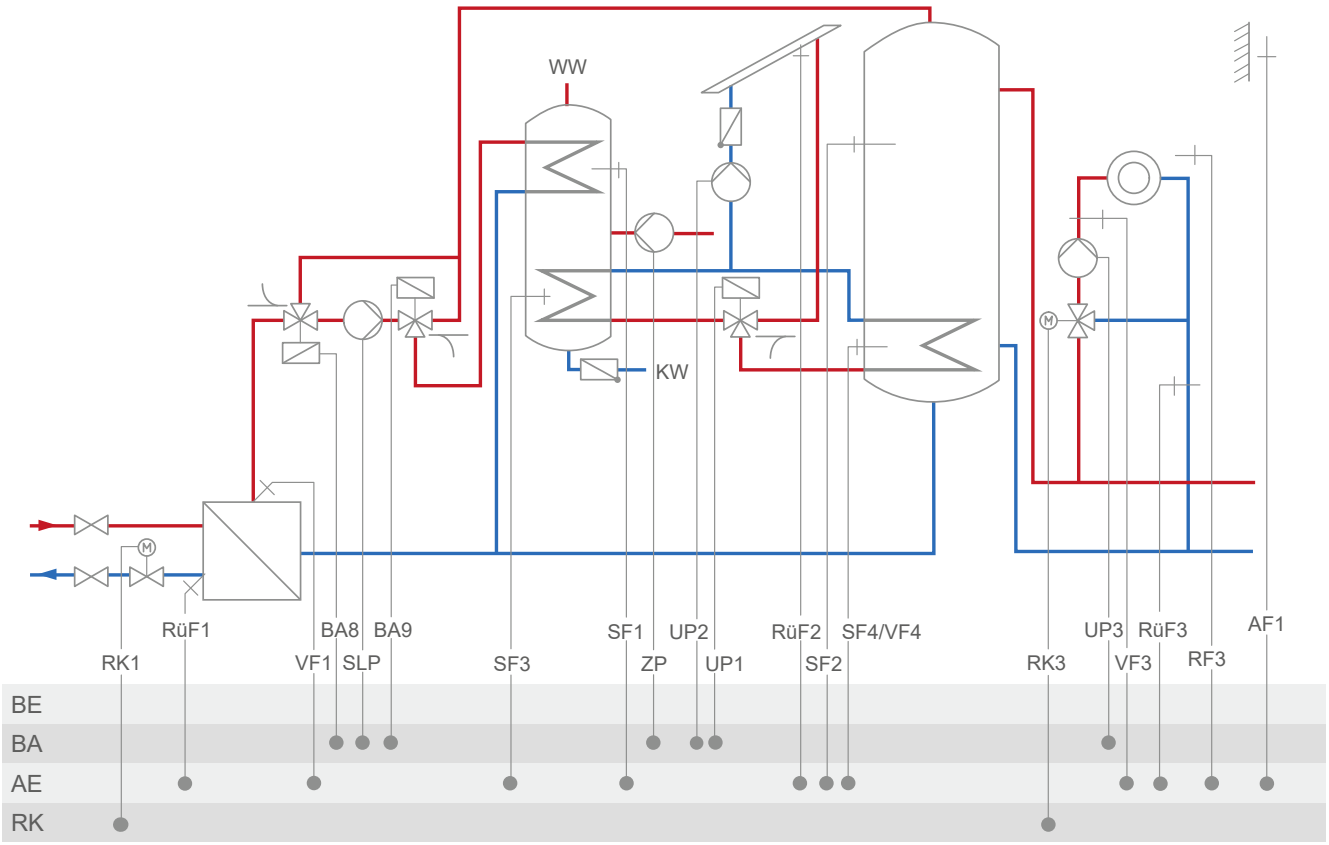

System	15.3
	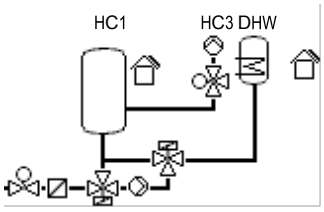
RK3: CO3 → F02 - 0 = Fixed set point control; CO3 → F02 - 1, select AF1 = Outdoor-temperature-compensated control with AF1; CO3→ F02 - 1, select AF2 = Outdoor-temperature-compensated control with AF2	
Default setting	
CO1 → F02	- 1 (with AF1)
CO1 → F03	- 1 (with RüF1)
CO3 → F01	- 0 (without RF3)
CO3 → F02	- 1 (with AF1)
CO3 → F03	- 0 (without RüF3)
CO4 → F01	- 1 (with SF1)
CO5 → F34, F35, F36, F37	Function AA1, AA2, AA3, AA4: – Control signal Y1 (RK1) – Control signal Y3 (RK3) – External demand — When CO1 → F18 - 1 – ZP speed — When CO4 → F25 - 1 – Outdoor temperature — When CO5 → F23 - 1 Direction 'Output'

System 15.4

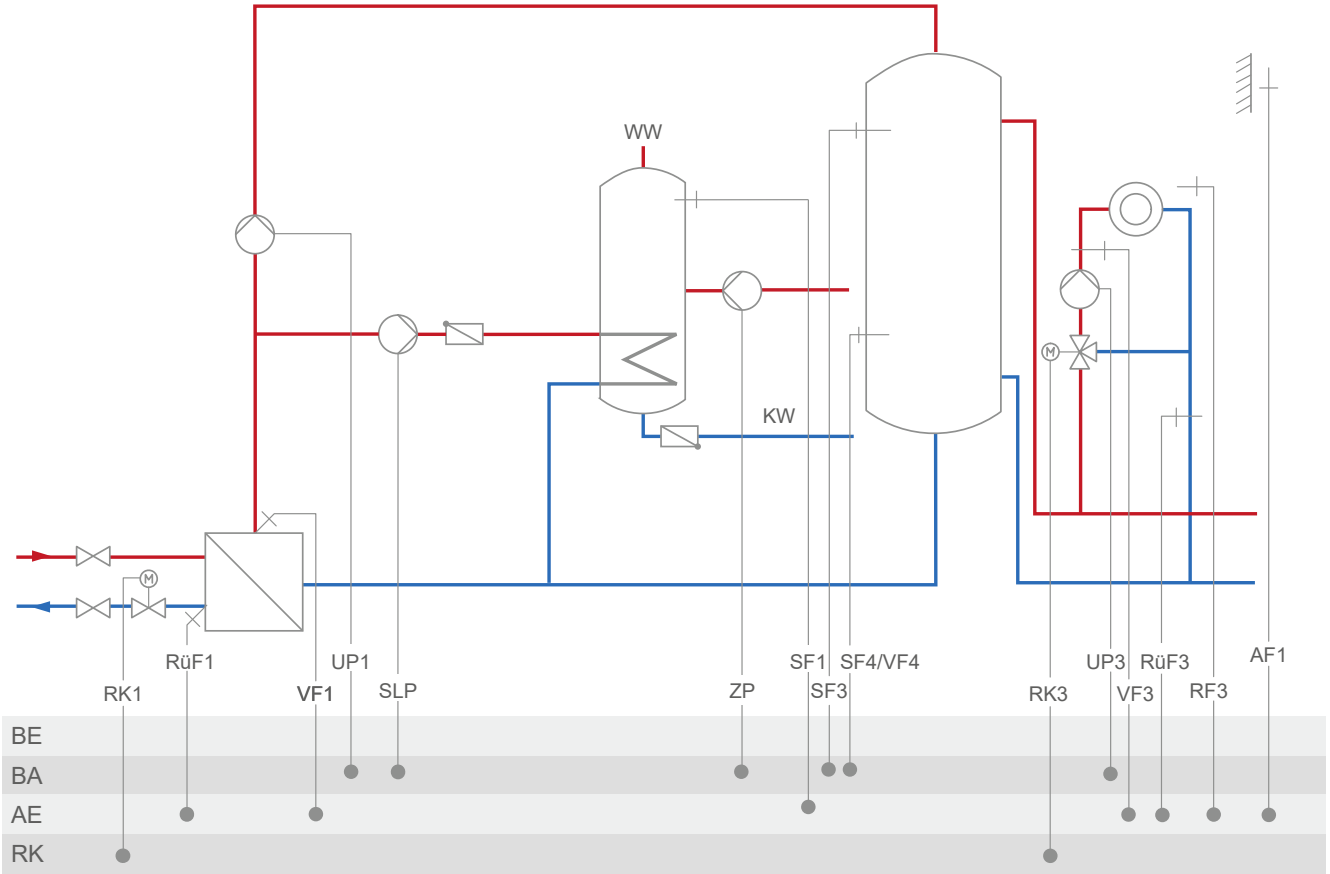
WW
KW
RK1
RüF1
VF1
UP1
SLP
ZP
SF1
SF3
SF4/VF4
RK3
UP3
VF3
RüF3
RF3
AF1
BE
BA
AE
RK

System	**15.4**
	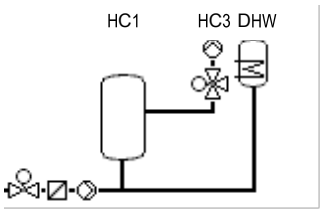
RK3: CO3 → F02 - 0 = Fixed set point control; CO3 → F02 - 1, select AF1 = Outdoor-temperature-compensated control with AF1; CO3→ F02 - 1, select AF2 = Outdoor-temperature-compensated control with AF2	
Default setting	
CO1 → F02	- 1 (with AF1)
CO1 → F03	- 1 (with RüF1)
CO3 → F01	- 0 (without RF3)
CO3 → F02	- 1 (with AF1)
CO3 → F03	- 0 (without RüF3)
CO4 → F01	- 1 (with SF1)
CO5 → F07	- 0 (without error message at terminal 43)
CO5 → F34, F35, F36, F37	Function AA1, AA2, AA3, AA4: – Control signal Y1 (RK1) – Control signal Y3 (RK3) – External demand — When CO1 → F18 - 1 – SLP speed — When CO4 → F21 - 1 – ZP speed — When CO4 → F25 - 1 – Outdoor temperature — When CO5 → F23 - 1 Direction 'Output'

System 15.5

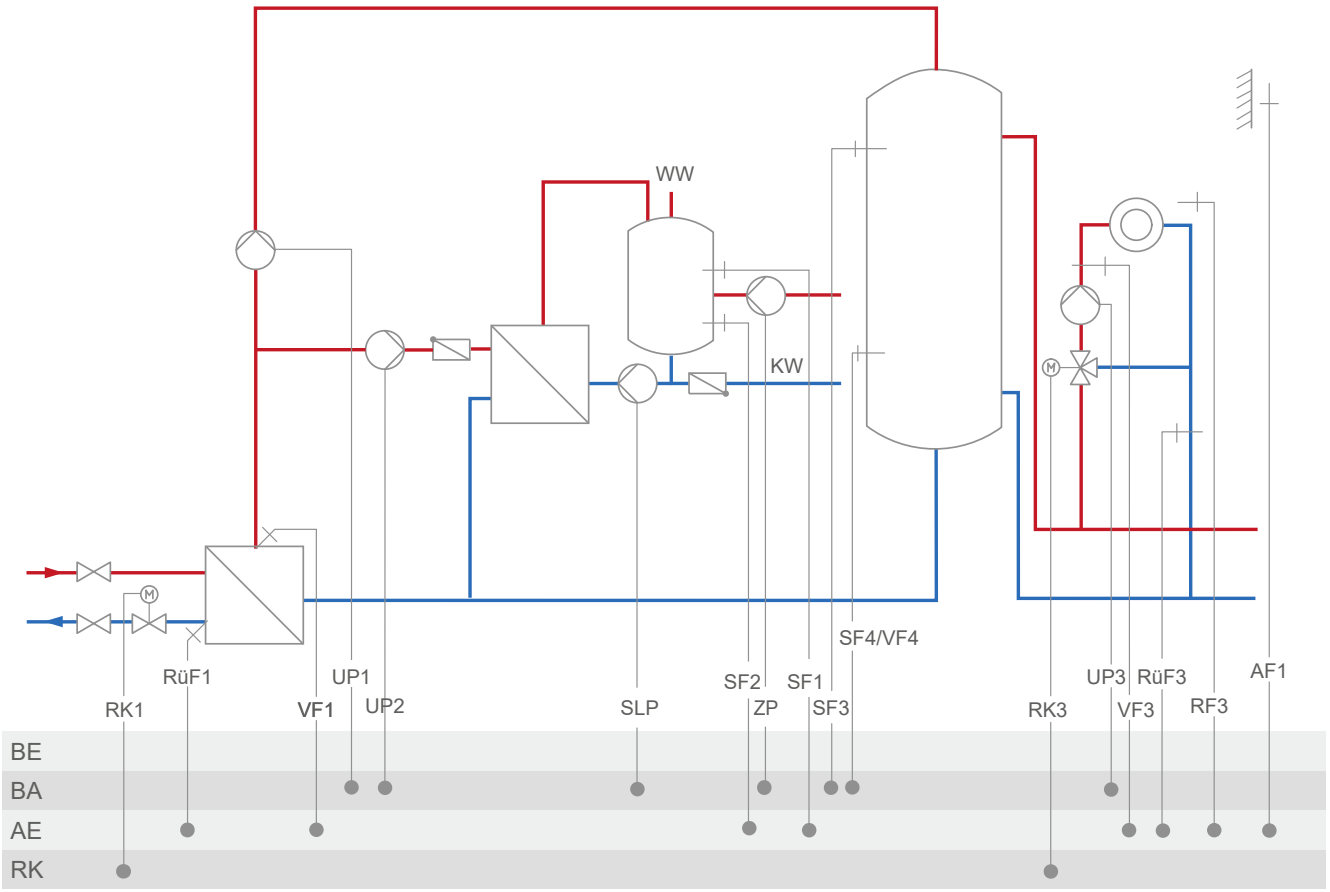
WW
KW
SF4/VF4
RK1
RüF1
VF1
UP1
UP2
SLP
SF2
ZP
SF1
SF3
RK3
UP3
VF3
RüF3
RF3
AF1
BE
BA
AE
RK

System	**15.5**
	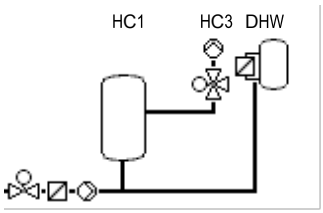
RK3: CO3 → F02 - 0 = Fixed set point control; CO3 → F02 - 1, select AF1 = Outdoor-temperature-compensated control with AF1; CO3→ F02 - 1, select AF2 = Outdoor-temperature-compensated control with AF2	
Default setting	
CO1 → F02	- 1 (with AF1)
CO1 → F03	- 1 (with RüF1)
CO3 → F01	- 0 (without RF3)
CO3 → F02	- 1 (with AF1)
CO3 → F03	- 0 (without RüF3)
CO4 → F01	- 1 (with SF1)
CO4 → F02	- 1 (with SF2)
CO5 → F07	- 0 (without error message at terminal 43)
CO5 → F34, F35, F36, F37	Function AA1, AA2, AA3, AA4: – Control signal Y1 (RK1) – Control signal Y3 (RK3) – External demand — When CO1 → F18 - 1 – SLP speed — When CO4 → F21 - 1 – ZP speed — When CO4 → F25 - 1 – Outdoor temperature — When CO5 → F23 - 1 Direction 'Output'

System 16.0

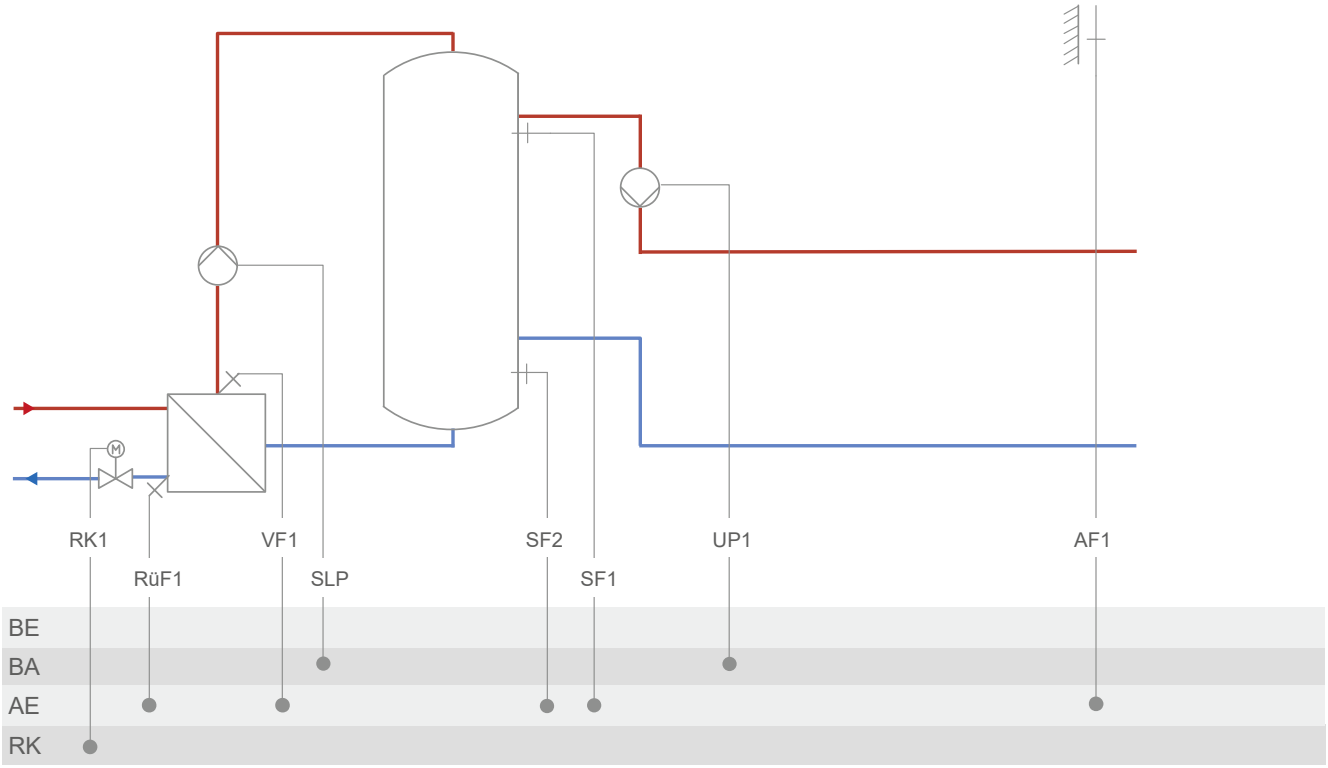

System	16.0
	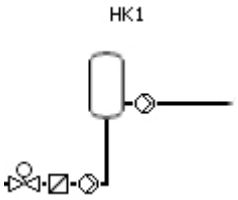
Default setting	
CO1 → F02	- 1 (with AF1)
CO1 → F03	- 1 (with RüF1)
CO1 → F06	- 1 (with SF2)
CO5 → F07	- 0 (without error message at terminal 43)
CO5 → F34, F35, F36, F37	Function AA1, AA2, AA3, AA4: – Control signal Y1 (RK1) – Differential temperature control When CO1 → F23 - 1 – External demand When CO1 → F18 - 1 – SLP speed When CO1 → F21 - 1 – Outdoor temperature When CO5 → F23 - 1 Direction 'Output'

System 16.1

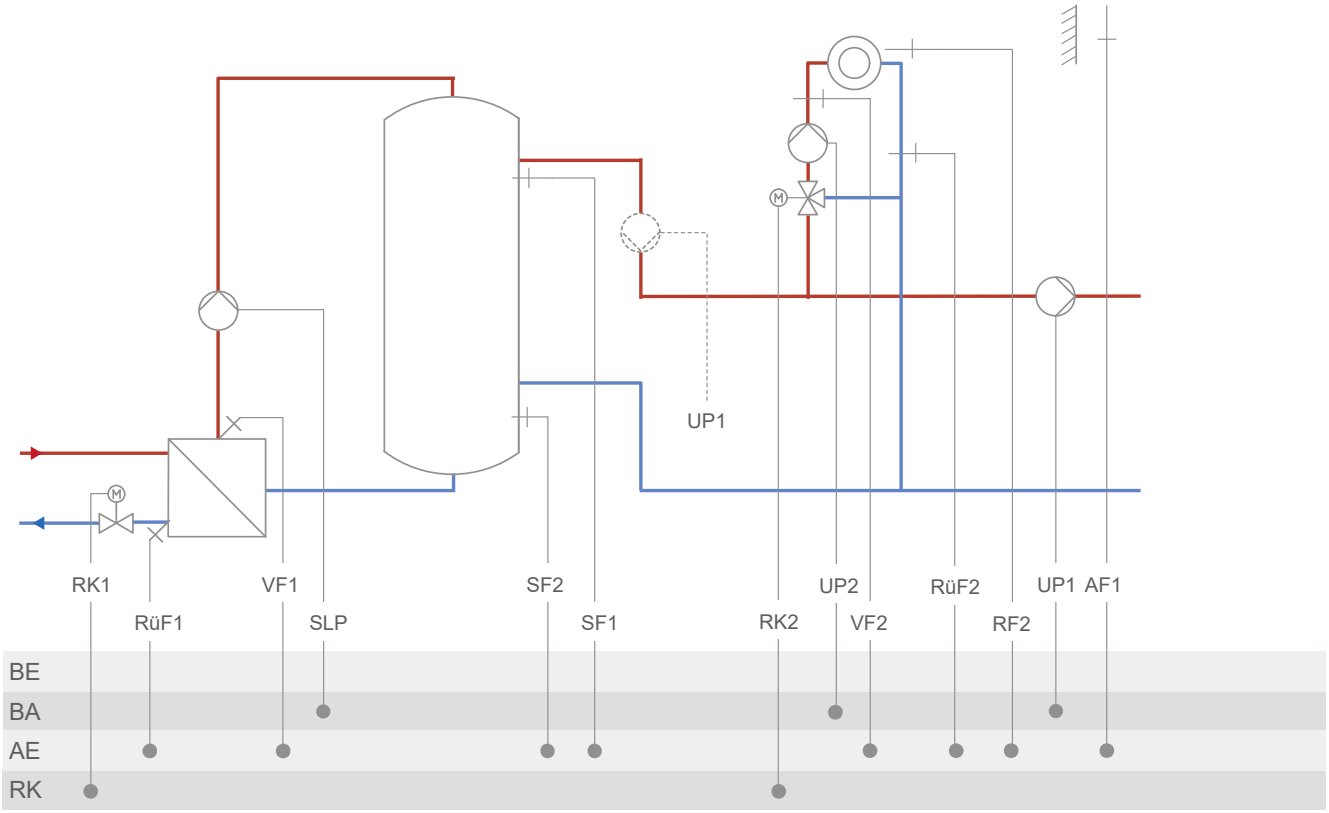
UP1
RK1
RüF1
VF1
SLP
SF2
SF1
RK2
UP2
VF2
RüF2
RF2
UP1
AF1
BE
BA
AE
RK

System	16.1
	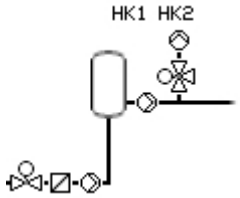
RK2: CO2 → F02 - 0 = Fixed set point control; CO2 → F02 - 1, select AF1 = Outdoor-temperature-compensated control with AF1; CO2→ F02 - 1, select AF2 = Outdoor-temperature-compensated control with AF2	
Default setting	
CO1 → F02	- 0 (without AF1)
CO1 → F03	- 1 (with RüF1)
CO1 → F06	- 1 (with SF2)
CO2 → F01	- 0 (without RF2)
CO2 → F02	- 1 (with AF1)
CO2 → F03	- 0 (without RüF2)
CO5 → F07	- 0 (without error message at terminal 38)
CO5 → F14	- 0 (UP1 according to the circulation pump ZP schedule or only active during the processing for an external demand)
CO5 → F34, F35, F36, F37	Function AA1, AA2, AA3, AA4: – Control signal Y1 (RK1) – Control signal Y2 (RK2) – External demand — When CO1 → F18 - 1 – SLP speed — When CO1 → F21 - 1 – Outdoor temperature — When CO5 → F23 - 1 Direction 'Output'

System 16.2

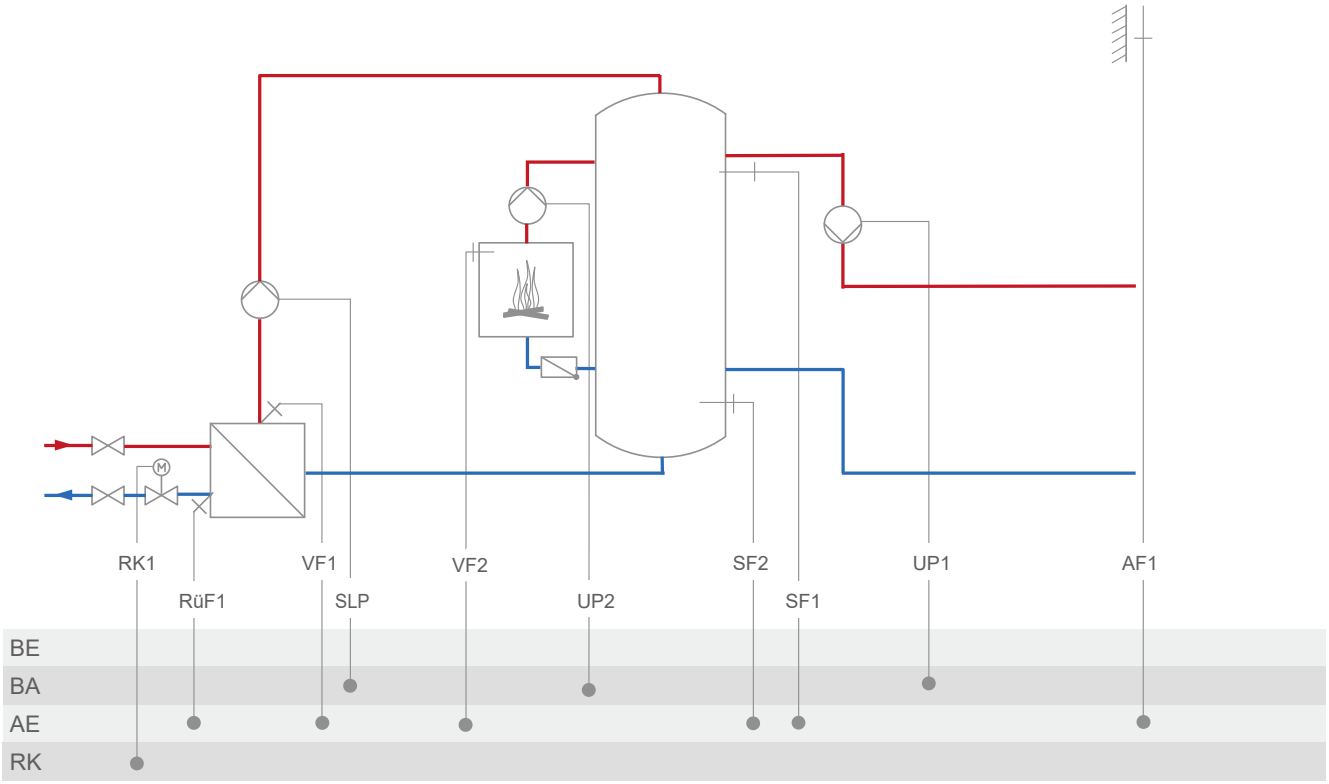

System	16.2
	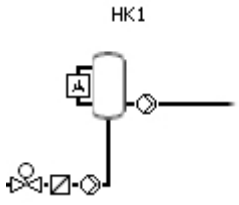
Default setting	
CO1 → F02	- 1 (with AF1)
CO1 → F03	- 1 (with RüF1)
CO1 → F06	- 1 (with SF2)
CO5 → F07	- 0 (without error message at terminal 43)
CO5 → F34, F35, F36, F37	Function AA1, AA2, AA3, AA4: – Control signal Y1 (RK1) – External demand — When CO1 → F18 - 1 – SLP speed — When CO1 → F21 - 1 – Outdoor temperature — When CO5 → F23 - 1 Direction 'Output'

System 16.3

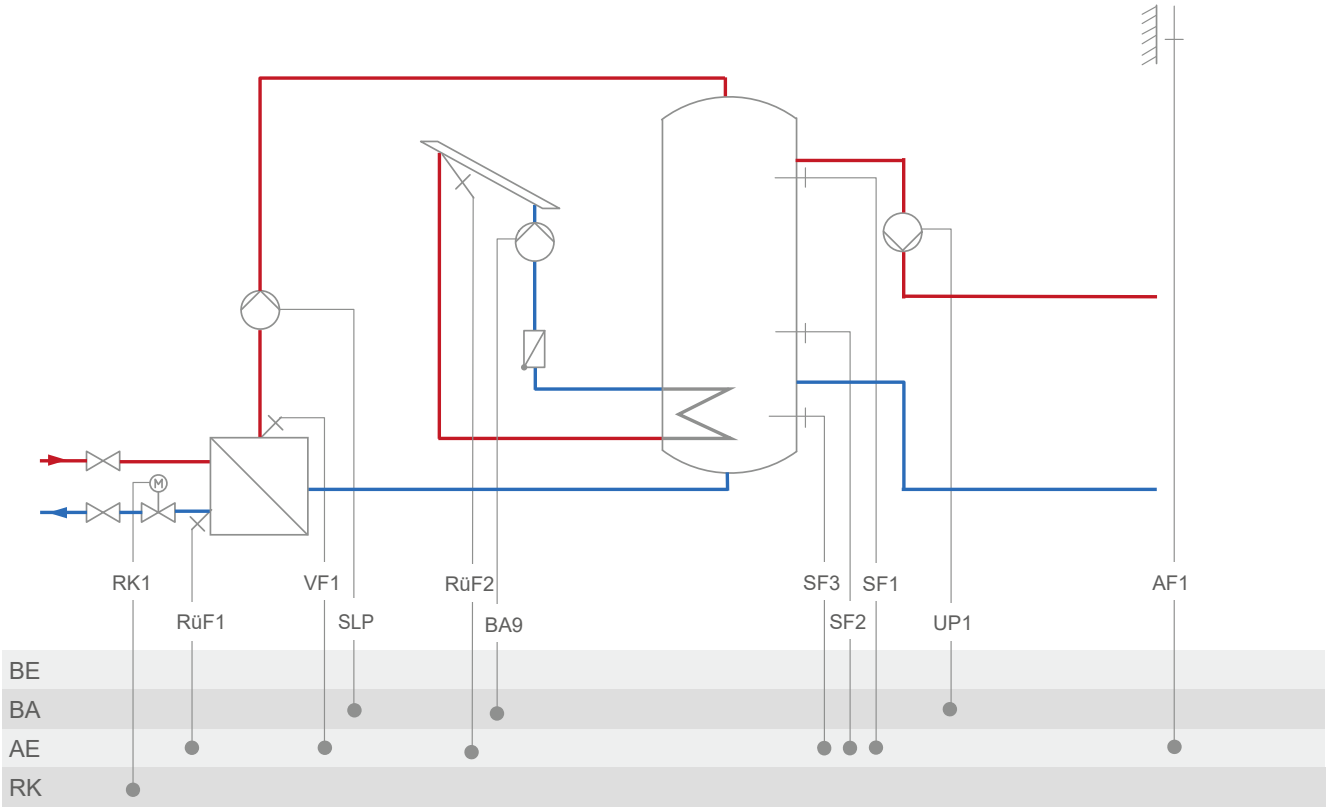

System	16.3
	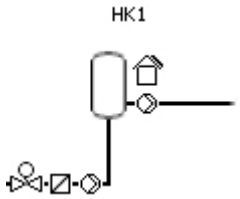
Default setting	
CO1 → F02	- 1 (with AF1)
CO1 → F03	- 1 (with RüF1)
CO1 → F06	- 1 (with SF2)
CO5 → F07	- 0 (without error message at terminal 43)
CO5 → F34, F35, F36, F37	Function AA1, AA2, AA3, AA4: – Control signal Y1 (RK1) – External demand — When CO1 → F18 - 1 – SLP speed — When CO1 → F21 - 1 – Outdoor temperature — When CO5 → F23 - 1 Direction 'Output'

System 16.4

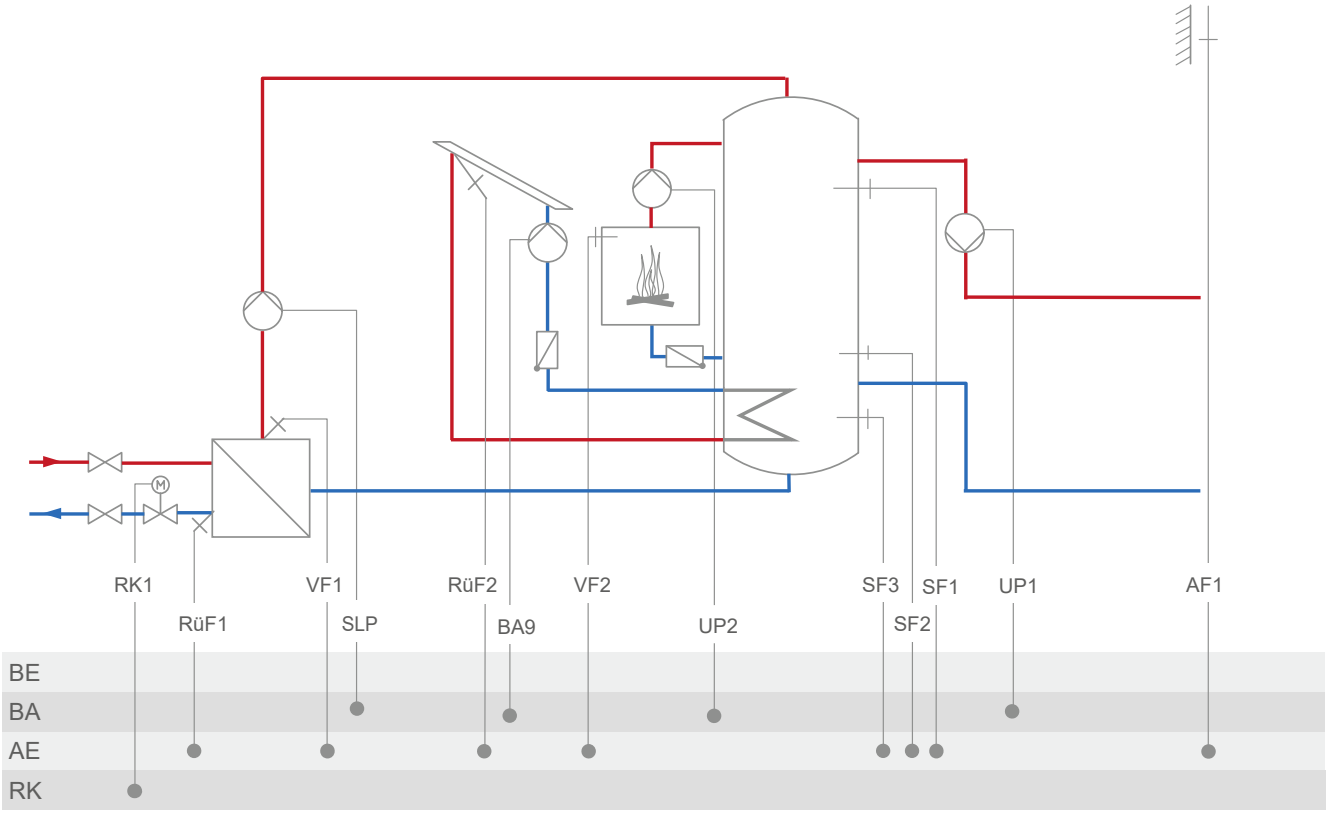

System	16.4
	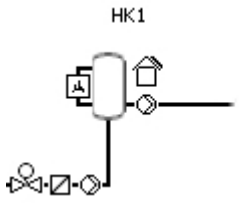
Default setting	
CO1 → F02	- 1 (with AF1)
CO1 → F03	- 1 (with RüF1)
CO1 → F06	- 1 (with SF2)
CO5 → F07	- 0 (without error message at terminal 43)
CO5 → F34, F35, F36, F37	Function AA1, AA2, AA3, AA4: – Control signal Y1 (RK1) – External demand — When CO1 → F18 - 1 – SLP speed — When CO1 → F21 - 1 – Outdoor temperature — When CO5 → F23 - 1 Direction 'Output'

System 16.5

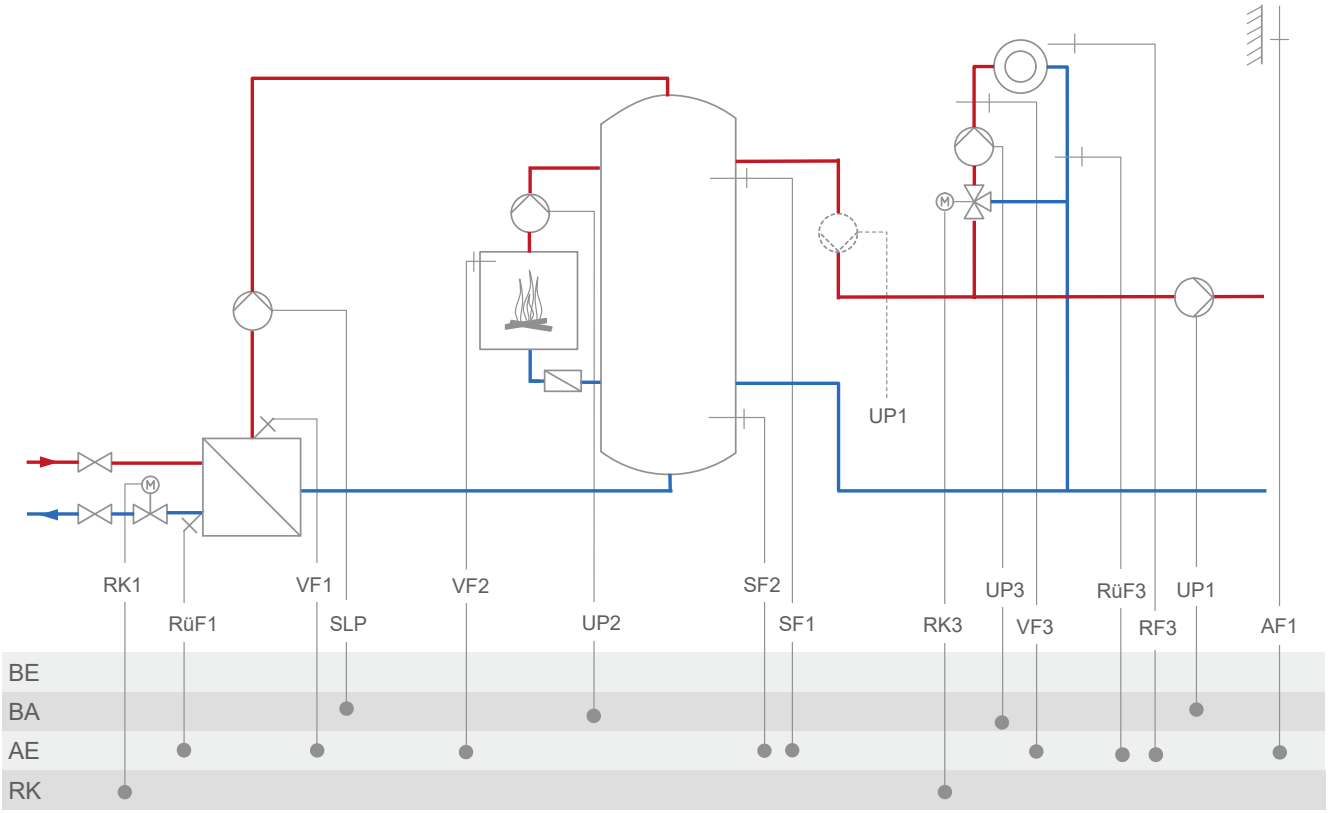
UP1
RK1
RüF1
VF1
SLP
VF2
UP2
SF2
SF1
RK3
UP3
VF3
RüF3
RF3
UP1
AF1
BE
BA
AE
RK

System	**16.5**
	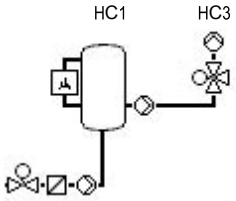
RK3: CO3 → F02 - 0 = Fixed set point control; CO3 → F02 - 1, select AF1 = Outdoor-temperature-compensated control with AF1; CO3→ F02 - 1, select AF2 = Outdoor-temperature-compensated control with AF2	
Default setting	
CO1 → F02	- 1 (with AF1)
CO1 → F03	- 1 (with RüF1)
CO1 → F06	- 1 (with SF2)
CO3 → F01	- 0 (without RF3)
CO3 → F02	- 1 (with AF1)
CO3 → F03	- 0 (without RüF3)
CO5 → F07	- 0 (without error message at terminal 38)
CO5 → F14	- 0 (UP1 according to the circulation pump ZP schedule or only active during the processing for an external demand)
CO5 → F34, F35, F36, F37	Function AA1, AA2, AA3, AA4: – Control signal Y1 (RK1) – Control signal Y3 (RK3) – External demand — When CO1 → F18 - 1 – SLP speed — When CO1 → F21 - 1 – Outdoor temperature — When CO5 → F23 - 1 Direction 'Output'

System 16.6

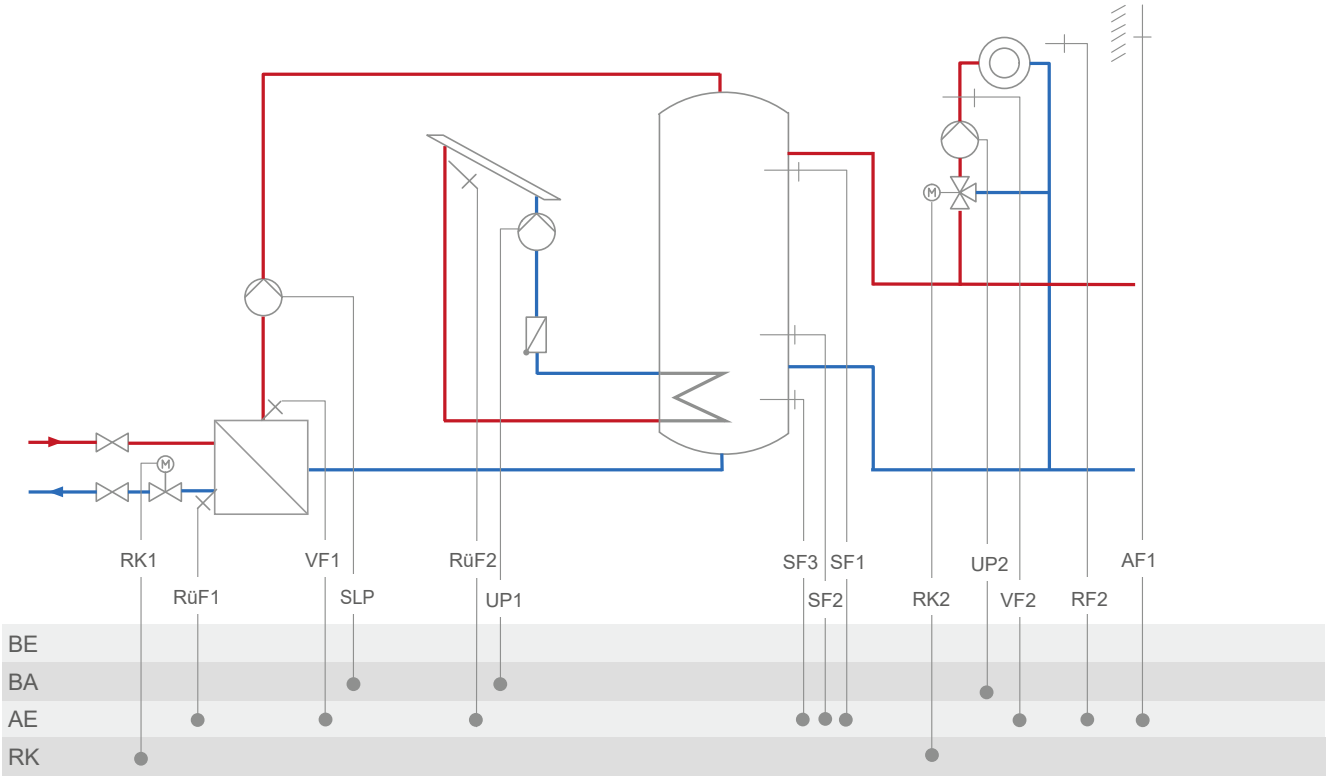

System	16.6
	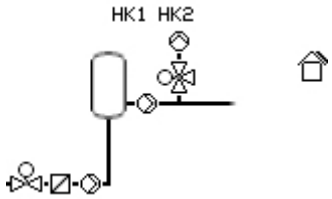
RK2: CO2 → F02 - 0 = Fixed set point control; CO2 → F02 - 1, select AF1 = Outdoor-temperature-compensated control with AF1; CO2→ F02 - 1, select AF2 = Outdoor-temperature-compensated control with AF2	
Default setting	
CO1 → F02	- 1 (with AF1)
CO1 → F03	- 1 (with RüF1)
CO1 → F06	- 1 (with SF2)
CO2 → F01	- 0 (without RF2)
CO2 → F02	- 1 (with AF1)
CO5 → F07	- 0 (without error message at terminal 38)
CO5 → F34, F35, F36, F37	Function AA1, AA2, AA3, AA4: – Control signal Y1 (RK1) – Control signal Y2 (RK2) – External demand — When CO1 → F18 - 1 – SLP speed — When CO1 → F21 - 1 – Outdoor temperature — When CO5 → F23 - 1 Direction 'Output'

System 16.7

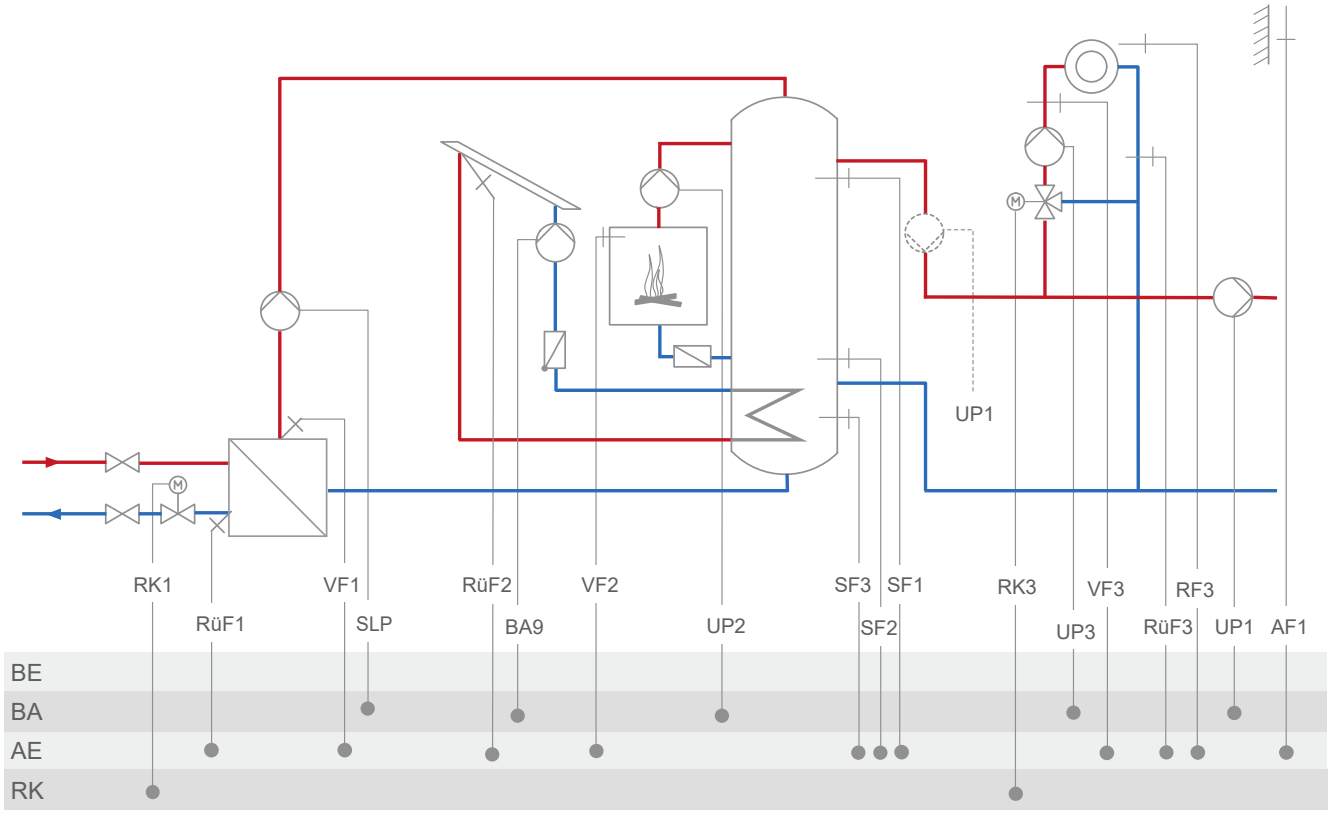
UP1
RK1
RüF1
VF1
SLP
RüF2
BA9
VF2
UP2
SF3
SF2
SF1
RK3
UP3
VF3
RüF3
RF3
UP1
AF1
BE
BA
AE
RK

System	16.7
	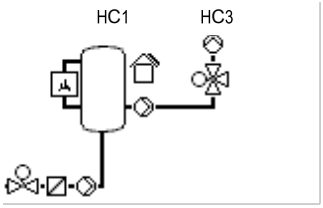
RK3: CO3 → F02 - 0 = Fixed set point control; CO3 → F02 - 1, select AF1 = Outdoor-temperature-compensated control with AF1; CO3→ F02 - 1, select AF2 = Outdoor-temperature-compensated control with AF2	
Default setting	
CO1 → F02	- 1 (with AF1)
CO1 → F03	- 1 (with RüF1)
CO1 → F06	- 1 (with SF2)
CO3 → F01	- 0 (without RF3)
CO3 → F02	- 1 (with AF1)
CO3 → F03	- 0 (without RüF3)
CO5 → F07	- 0 (without error message at terminal 43)
CO5 → F14	- 0 (UP1 according to the circulation pump ZP schedule or only active during the processing for an external demand)
CO5 → F34, F35, F36, F37	Function AA1, AA2, AA3, AA4: – Control signal Y1 (RK1) – Control signal Y3 (RK3) – External demand — When CO1 → F18 - 1 – SLP speed — When CO1 → F21 - 1 – Outdoor temperature — When CO5 → F23 - 1 Direction 'Output'

System 16.8

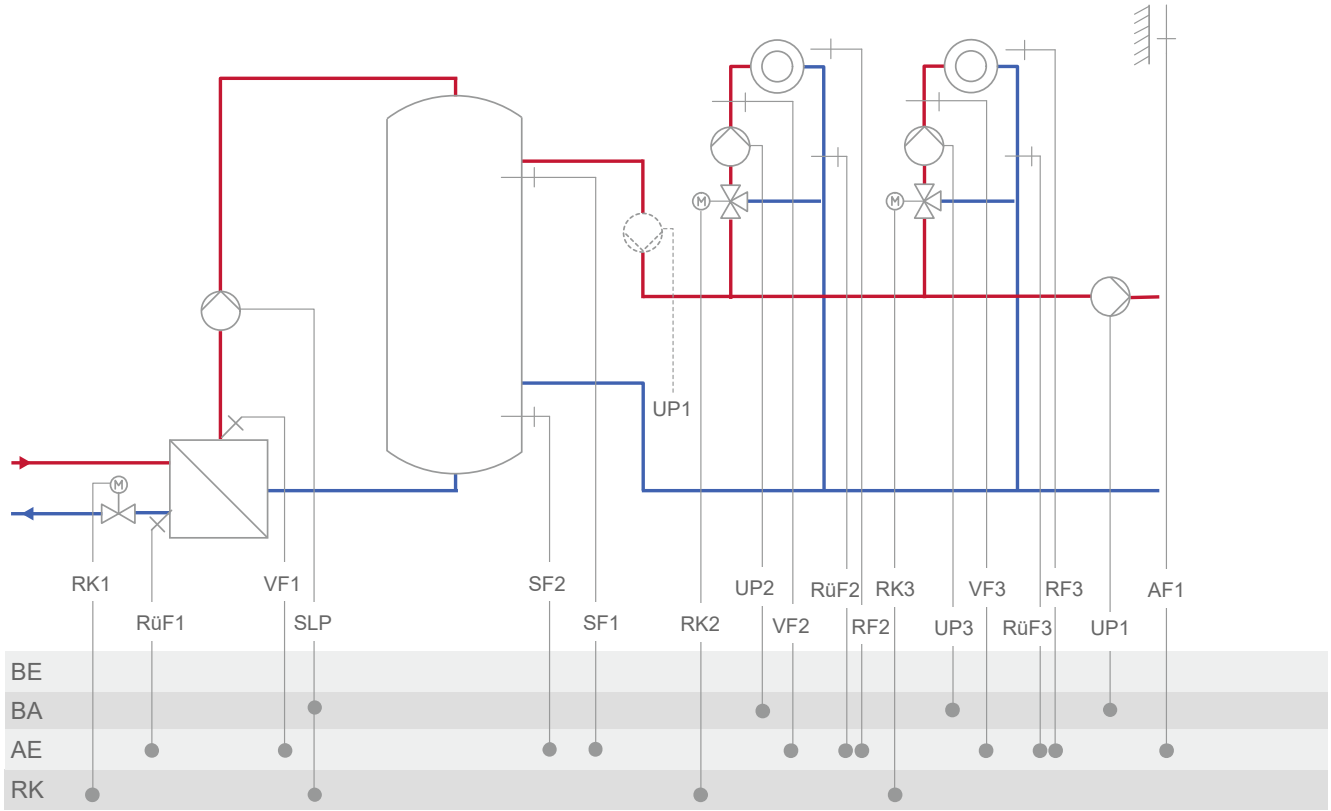
UP1
RK1
RüF1
VF1
SLP
SF2
SF1
RK2
UP2
VF2
RüF2
RF2
RK3
UP3
VF3
RüF3
RF3
UP1
AF1
BE
BA
AE
RK

System	16.8
	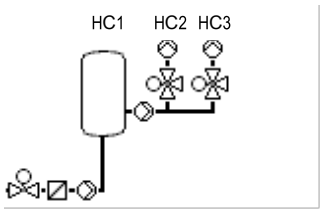
RK2: CO2 → F02 - 0 = Fixed set point control; CO2 → F02 - 1, select AF1 = Outdoor-temperature-compensated control with AF1; CO2→ F02 - 1, select AF2 = Outdoor-temperature-compensated control with AF2 RK3: CO3 → F02 - 0 = Fixed set point control; CO3 → F02 - 1, select AF1 = Outdoor-temperature-compensated control with AF1; CO3→ F02 - 1, select AF2 = Outdoor-temperature-compensated control with AF2	
Default setting	
CO1 → F02	- 1 (with AF1)
CO1 → F03	- 1 (with RüF1)
CO1 → F06	- 1 (with SF2)
CO2 → F01	- 0 (without RF2)
CO2 → F02	- 1 (with AF1)
CO2 → F03	- 0 (without RüF2)
CO3 → F01	- 0 (without RF3)
CO3 → F02	- 1 (with AF1)
CO3 → F03	- 0 (without RüF3)
CO5 → F07	- 0 (without error message at terminal 38)
CO5 → F14	- 0 (UP1 according to the circulation pump ZP schedule or only active during the processing for an external demand)
CO5 → F34, F35, F36, F37	Function AA1, AA2, AA3, AA4: – Control signal Y1 (RK1) – Control signal Y2 (RK2) – Control signal Y3 (RK3) – External demand — When CO1 → F18 - 1 – SLP speed — When CO1 → F21 - 1 – Outdoor temperature — When CO5 → F23 - 1 Direction 'Output'

System 17.1

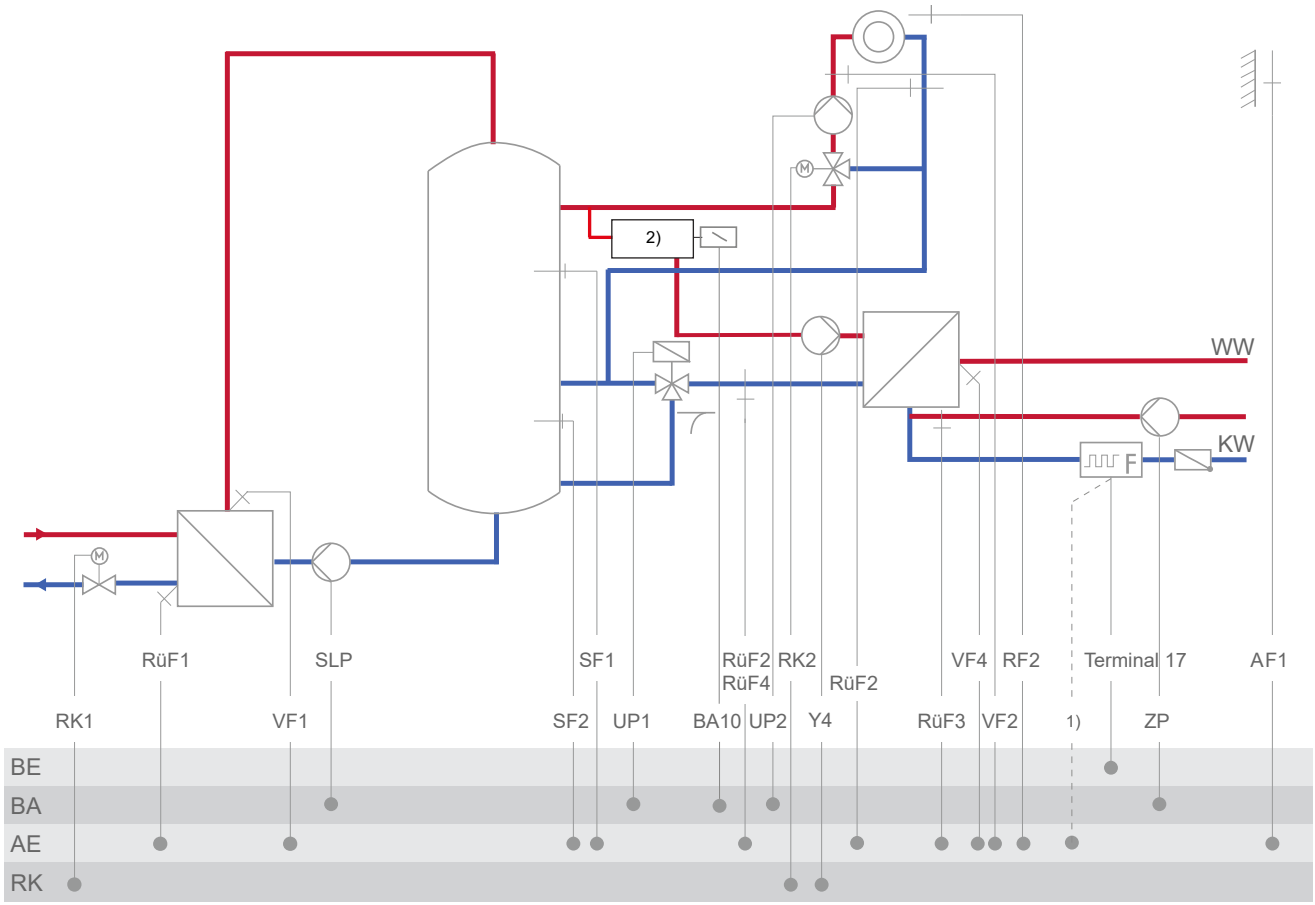

1) Terminal 15, 16 or 17 when a vortex flow sensor is used

2) Electric heating

System	17.1
	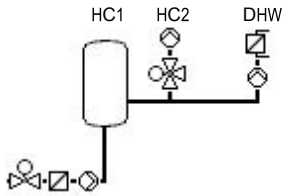
RK2: CO2 → F02 - 0 = Fixed set point control; CO2 → F02 - 1, select AF1 = Outdoor-temperature-compensated control with AF1; CO2→ F02 - 1, select AF2 = Outdoor-temperature-compensated control with AF2	
Default setting	
CO1 → F02	- 1 (with AF1)
CO1 → F03	- 1 (with RüF1)
CO1 → F06	- 1 (with SF2)
CO2 → F01	- 0 (without RF2)
CO2 → F02	- 1 (with AF1)
CO2 → F03	- 0 (without RüF2 in RK2)
CO4 → F03	- 0 (without RüF2/RüF4)
CO4 → F04	- 0 (without flow switch)
CO4 → F07	- 0 (without error message at terminal 46)
CO4 → F14	- 0 (without RüF3)
CO5 → F34, F35, F36, F37	Function AA1, AA2, AA3, AA4: – Control signal Y1 (RK1) – Control signal Y2 (RK2) – Control signal Y4 – 5 V supply – 10 V supply – External demand — When CO1 → F18 - 1 – SLP speed — When CO1 → F21 - 1 – ZP speed — When CO4 → F25 - 1 – Outdoor temperature — When CO5 → F23 - 1 Direction 'Output'

System 17.8

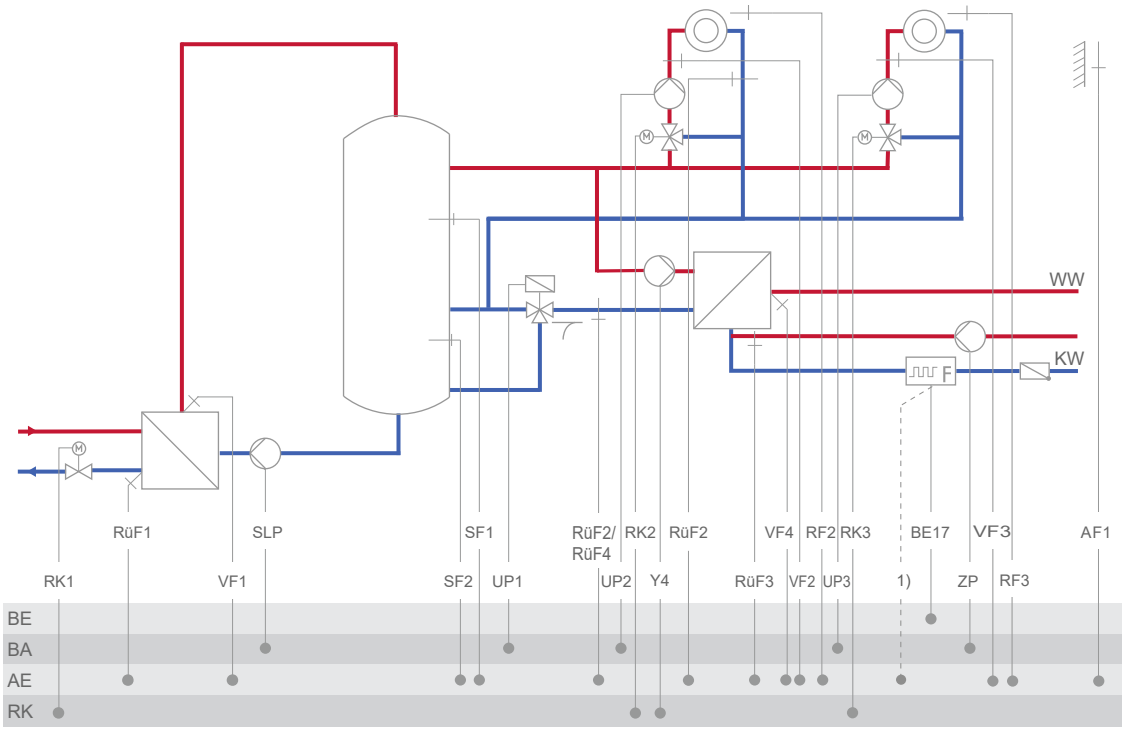

1) bei Vortex-Sensor Kl. 15, 16 oder 17

System	17.8
	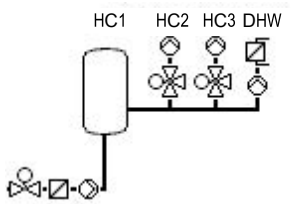
RK2: CO2 → F02 - 0 = Fixed set point control; CO2 → F02 - 1, select AF1 = Outdoor-temperature-compensated control with AF1; CO2→ F02 - 1, select AF2 = Outdoor-temperature-compensated control with AF2 RK3: CO3 → F02 - 0 = Fixed set point control; CO3 → F02 - 1, select AF1 = Outdoor-temperature-compensated control with AF1; CO3→ F02 - 1, select AF2 = Outdoor-temperature-compensated control with AF2	
Default setting	
CO1 → F02	- 1 (with AF1)
CO1 → F03	- 1 (with RüF1)
CO1 → F06	- 1 (with SF2)
CO2 → F01	- 0 (without RF2)
CO2 → F02	- 1 (with AF1)
CO2 → F03	- 0 (without RüF2 in RK2)
CO3 → F01	- 0 (without RF3)
CO3 → F02	- 1 (with AF1)
CO4 → F03	- 0 (without RüF2/RüF4)
CO4 → F04	- 0 (without flow switch)
CO4 → F14	- 0 (without RüF3)
CO5 → F34, F35, F36, F37	Function AA1, AA2, AA3, AA4: – Control signal Y1 (RK1) – Control signal Y2 (RK2) – Control signal Y3 (RK3) – Control signal Y4 – 5 V supply – 10 V supply – External demand — When CO1 → F18 - 1 – SLP speed — When CO1 → F21 - 1 – ZP speed — When CO4 → F25 - 1 – Outdoor temperature — When CO5 → F23 - 1 Direction 'Output'

System 18.1-1

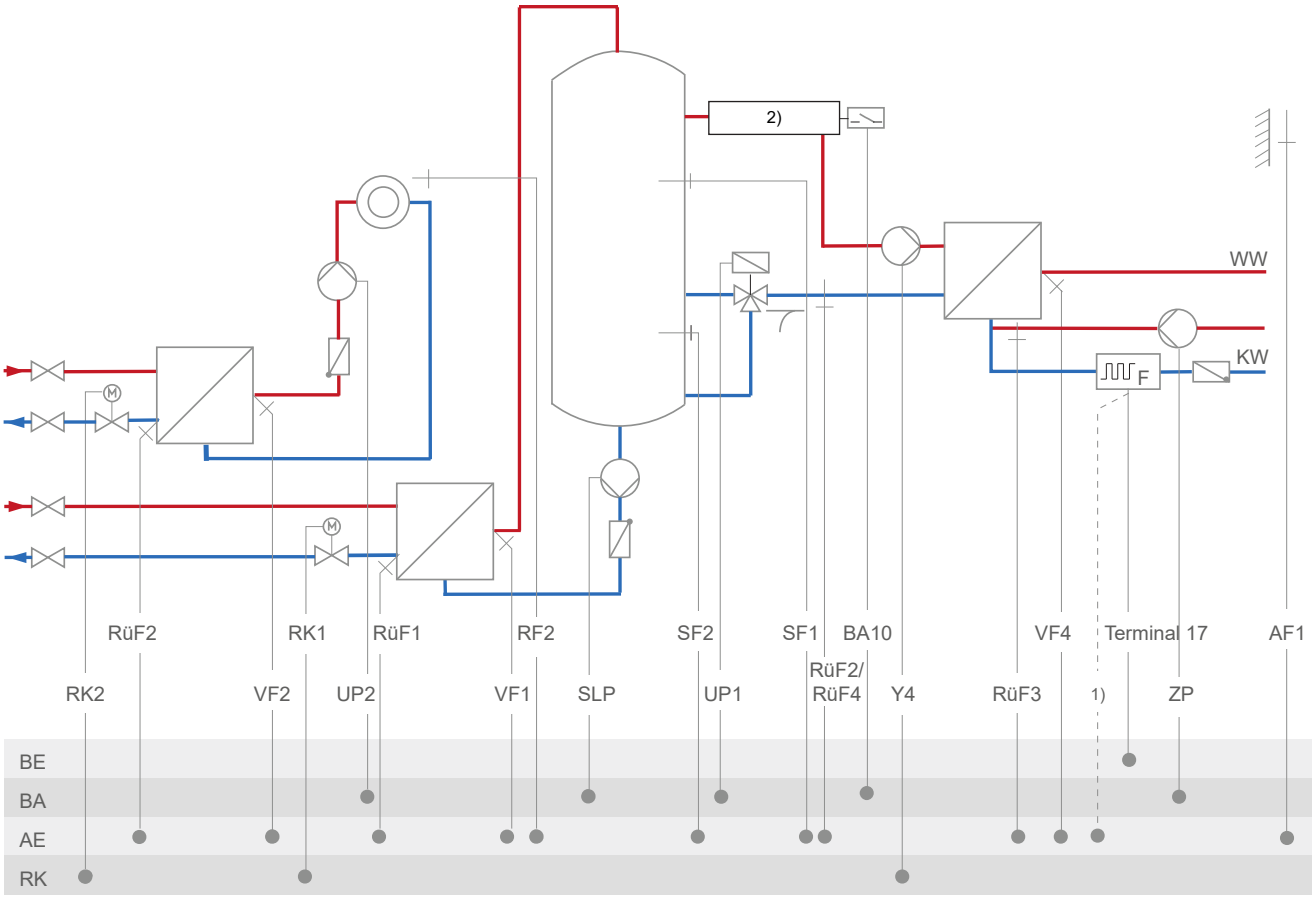

[1] Terminal 15, 16 or 17 when a vortex flow sensor is used

[2] Electric heating

System	18.1-1
	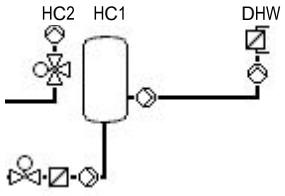
RK2: CO2 → F02 - 0 = Fixed set point control; CO2 → F02 - 1, select AF1 = Outdoor-temperature-compensated control with AF1; CO2→ F02 - 1, select AF2 = Outdoor-temperature-compensated control with AF2	
Default setting	
CO1 → F02	- 1 (with AF1)
CO1 → F03	- 1 (with RüF1)
CO1 → F06	- 1 (with SF2)
CO2 → F01	- 0 (without RF2)
CO2 → F02	- 1 (with AF1)
CO2 → F03	- 1 (with RüF2 in RK2)
CO4 → F03	- 0 (without RüF2/RüF4)
CO4 → F04	- 0 (without flow switch)
CO4 → F07	- 0 (without error message at terminal 46)
CO4 → F14	- 0 (without RüF3)
CO5 → F34, F35, F36, F37	Function AA1, AA2, AA3, AA4: – Control signal Y1 (RK1) – Control signal Y2 (RK2) – Control signal Y4 – 5 V supply – 10 V supply – External demand — When CO1 → F18 - 1 – SLP speed — When CO1 → F21 - 1 – ZP speed — When CO4 → F25 - 1 – Outdoor temperature — When CO5 → F23 - 1 Direction 'Output'

System 18.1-2

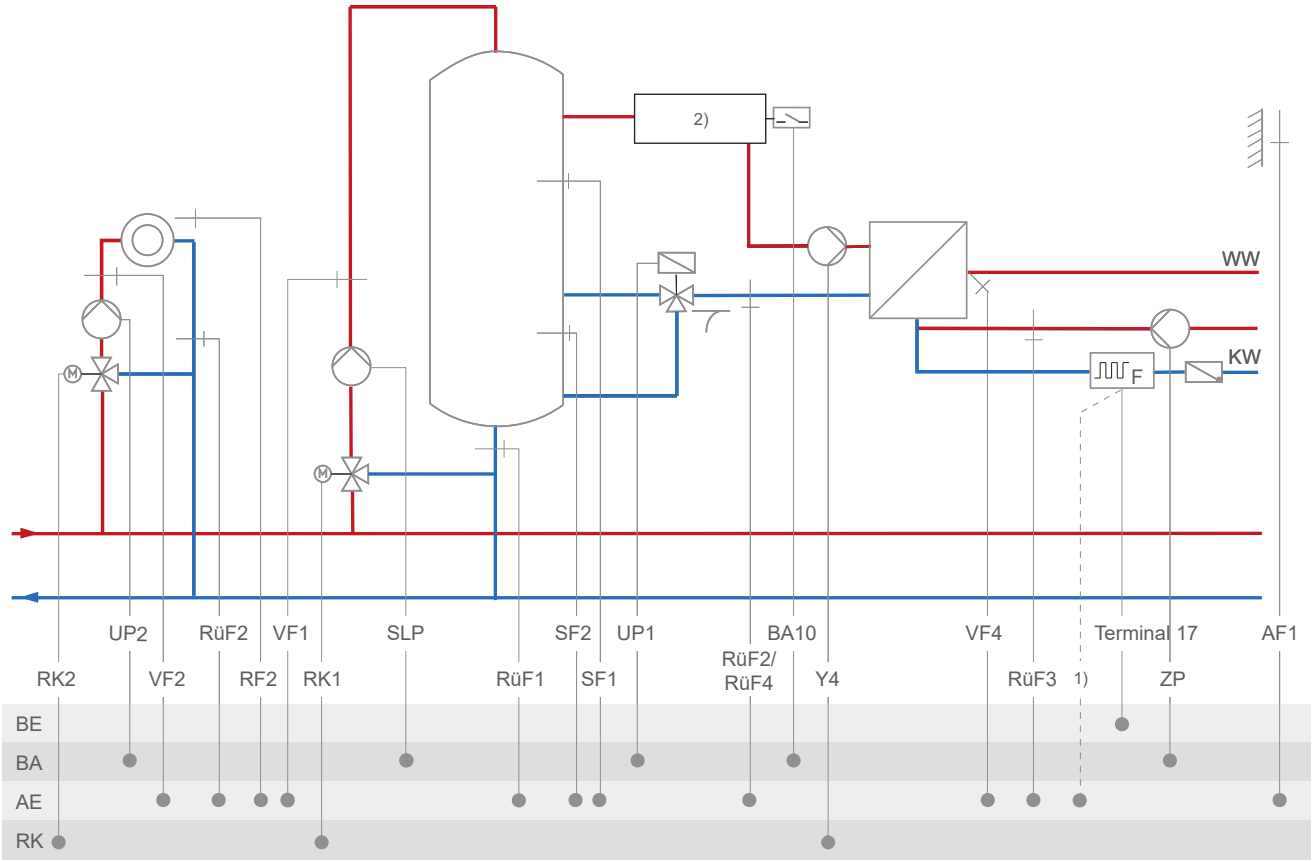

1) Terminal 15, 16 or 17 when a vortex flow sensor is used

2) Electric heating

System	18.1-2
	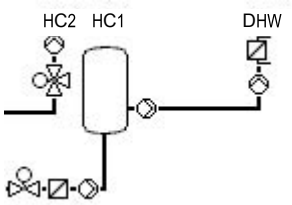
RK2: CO2 → F02 - 0 = Fixed set point control; CO2 → F02 - 1, select AF1 = Outdoor-temperature-compensated control with AF1; CO2→ F02 - 1, select AF2 = Outdoor-temperature-compensated control with AF2	
Default setting	
CO1 → F02	- 1 (with AF1)
CO1 → F03	- 1 (with RüF1)
CO1 → F06	- 1 (with SF2)
CO2 → F01	- 0 (without RF2)
CO2 → F02	- 1 (with AF1)
CO2 → F03	- 1 (with RüF2 in RK2)
CO4 → F03	- 0 (without RüF2/RüF4)
CO4 → F04	- 0 (without flow switch)
CO4 → F07	- 0 (without error message at terminal 46)
CO4 → F14	- 0 (without RüF3)
CO5 → F34, F35, F36, F37	Function AA1, AA2, AA3, AA4: – Control signal Y1 (RK1) – Control signal Y2 (RK2) – Control signal Y4 – 5 V supply – 10 V supply – External demand — When CO1 → F18 - 1 – SLP speed — When CO1 → F21 - 1 – ZP speed — When CO4 → F25 - 1 – Outdoor temperature — When CO5 → F23 - 1 Direction 'Output'

System 20.0

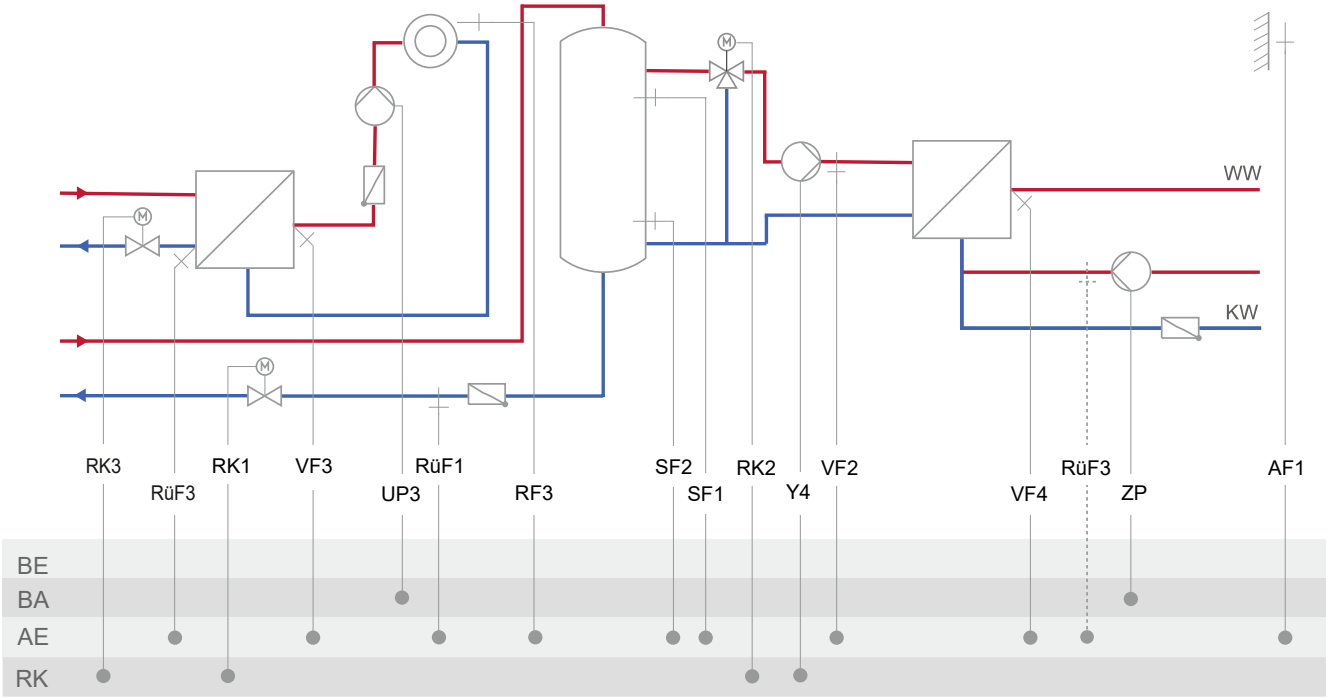
WW
KW
RK3
RüF3
RK1
VF3
UP3
RüF1
RF3
SF2
SF1
RK2
Y4
VF2
VF4
RüF3
ZP
AF1
BE
BA
AE
RK

System	**20.0**
	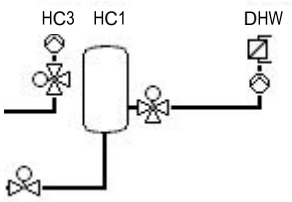
RK3: CO3 → F02 - 0 = Fixed set point control; CO3 → F02 - 1, select AF1 = Outdoor-temperature-compensated control with AF1; CO3→ F02 - 1, select AF2 = Outdoor-temperature-compensated control with AF2	
Default setting	
CO1 → F02	- 1 (with AF1)
CO1 → F03	- 0 (without RüF1)
CO1 → F06	- 1 (with SF2)
CO3 → F01	- 0 (without RF3)
CO3 → F02	- 1 (with AF1)
CO3 → F03	- 1 (with RüF3 in RK3)
CO4 → F04	- 0 (without flow switch)
CO4 → F07	- 0 (without error message at terminal 46)
CO4 → F14	- 0 (without RüF3)
CO5 → F34, F35, F36, F37	Function AA1, AA2, AA3, AA4: – Control signal Y1 (RK1) – Control signal Y2 (RK2) – Control signal Y3 (RK3) – Control signal Y4 – External demand — When CO1 → F18 - 1 – SLP speed — When CO1 → F21 - 1 – ZP speed — When CO4 → F25 - 1 – Outdoor temperature — When CO5 → F23 - 1 Direction 'Output'

System 21.0

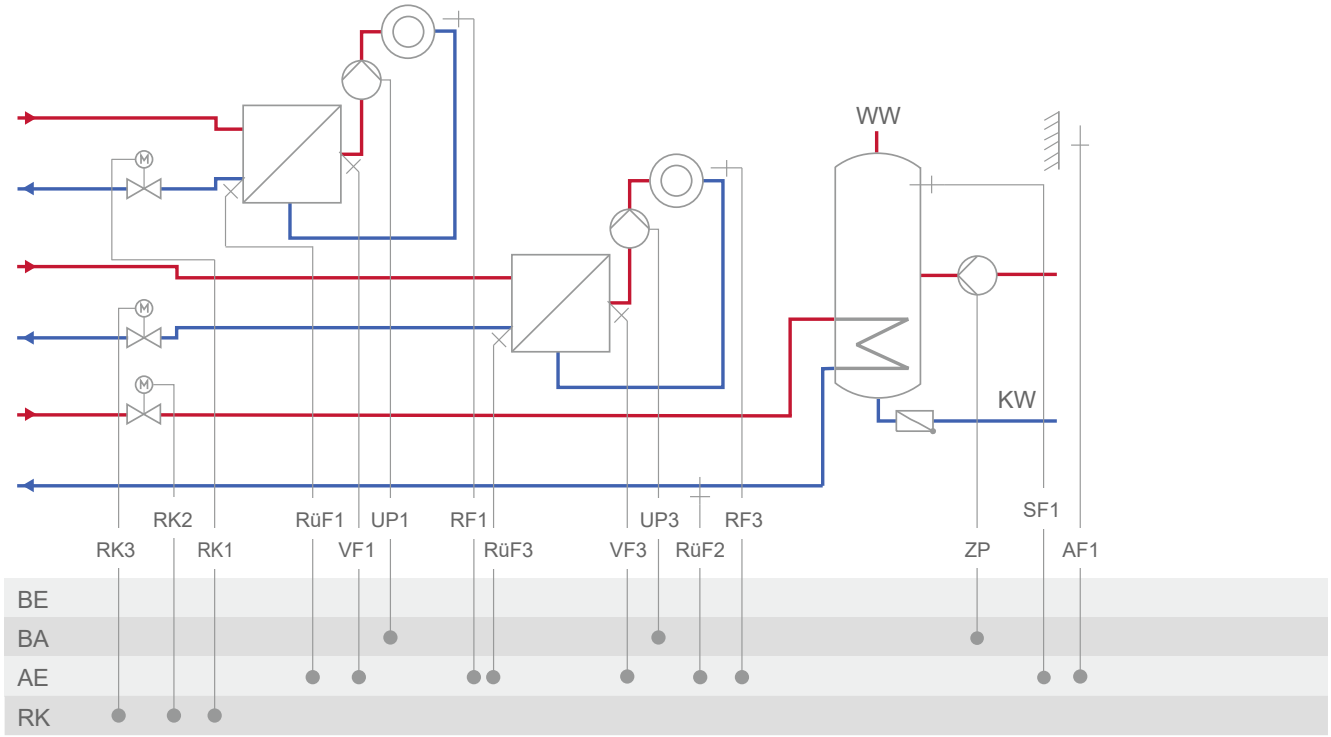

System	21.0
	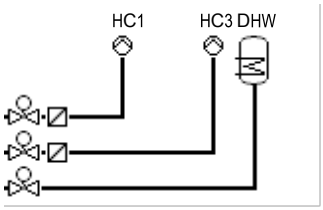
RK3: CO3 → F02 - 0 = Fixed set point control; CO3 → F02 - 1, select AF1 = Outdoor-temperature-compensated control with AF1; CO3→ F02 - 1, select AF2 = Outdoor-temperature-compensated control with AF2	
Default setting	
CO1 → F01	- 0 (without RF1)
CO1 → F02	- 1 (with AF1)
CO1 → F03	- 1 (with RüF1)
CO3 → F01	- 0 (without RF3)
CO3 → F02	- 1 (with AF1)
CO3 → F03	- 1 (with RüF3)
CO4 → F03	- 0 (without RüF2)
CO5 → F07	- 0 (without error message at terminal 37)
CO5 → F34, F35, F36, F37	Function AA1, AA2, AA3, AA4: – Control signal Y1 (RK1) – Control signal Y2 (RK2) – Control signal Y3 (RK3) – External demand — When CO1 → F18 - 1 – ZP speed — When CO4 → F25 - 1 – Outdoor temperature — When CO5 → F23 - 1 Direction 'Output'

System 21.1-1

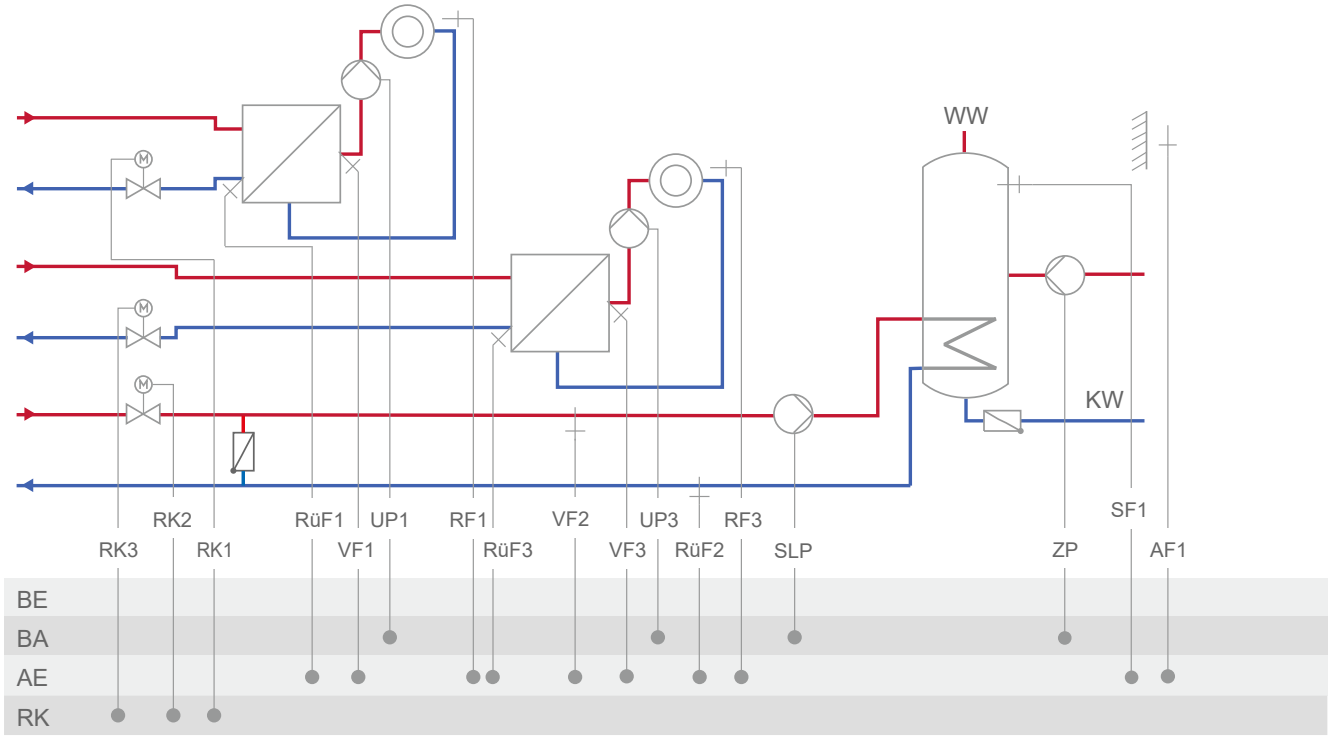
WW
KW
RK2
RüF1
UP1
RF1
VF2
UP3
RF3
SF1
RK3
RK1
VF1
RüF3
VF3
RüF2
SLP
ZP
AF1
BE
BA
AE
RK

System	**21.1-1**
	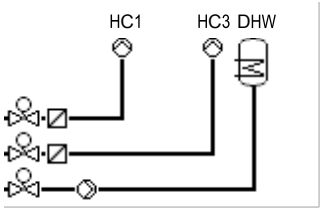
RK3: CO3 → F02 - 0 = Fixed set point control; CO3 → F02 - 1, select AF1 = Outdoor-temperature-compensated control with AF1; CO3→ F02 - 1, select AF2 = Outdoor-temperature-compensated control with AF2	
Default setting	
CO1 → F01	- 0 (without RF1)
CO1 → F02	- 1 (with AF1)
CO1 → F03	- 0 (without RüF1)
CO3 → F01	- 0 (without RF3)
CO3 → F02	- 1 (with AF1)
CO3 → F03	- 0 (without RüF3)
CO4 → F01	- 1 (with SF1)
CO4 → F02	- 0 (without SF2)
CO4 → F03	- 0 (without RüF2)
CO5 → F34, F35, F36, F37	Function AA1, AA2, AA3, AA4: – Control signal Y1 (RK1) – Control signal Y2 (RK2) – Control signal Y3 (RK3) – External demand — When CO1 → F18 - 1 – SLP speed — When CO4 → F21 - 1 – ZP speed — When CO4 → F25 - 1 – Outdoor temperature — When CO5 → F23 - 1 Direction 'Output'

System 21.1-2

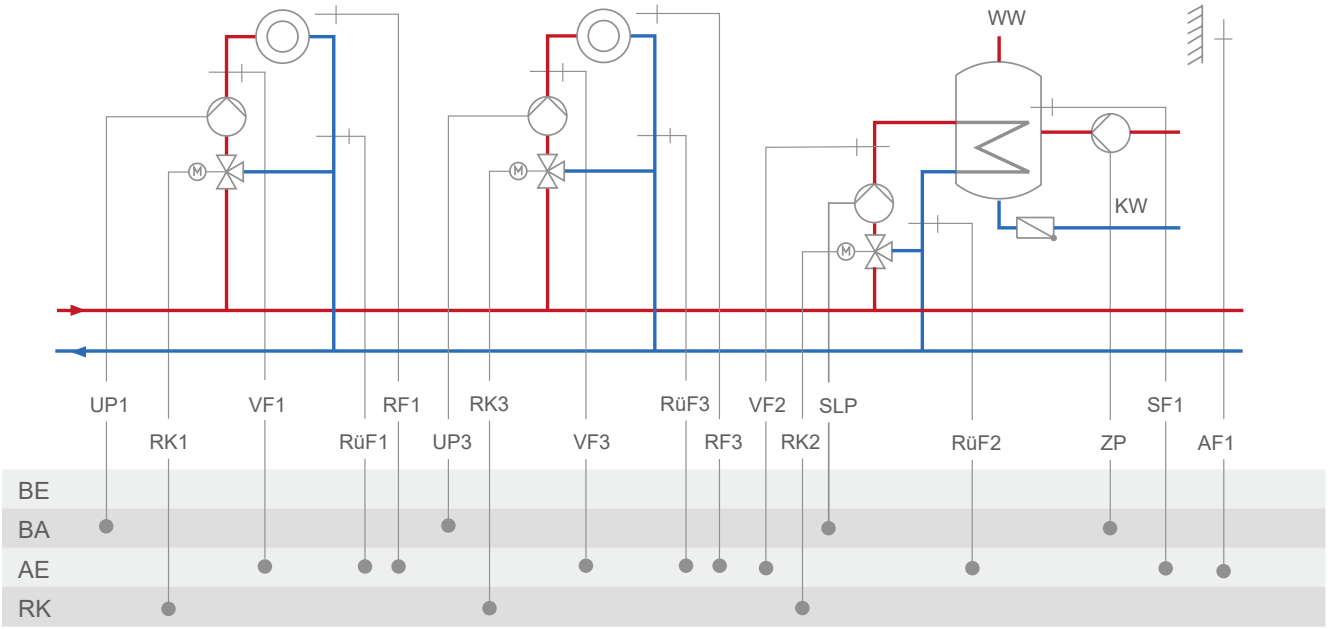

System	21.1-2
	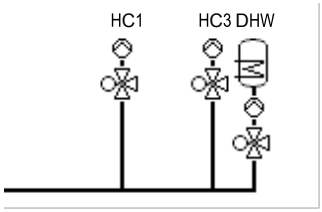
RK3: CO3 → F02 - 0 = Fixed set point control; CO3 → F02 - 1, select AF1 = Outdoor-temperature-compensated control with AF1; CO3→ F02 - 1, select AF2 = Outdoor-temperature-compensated control with AF2	
Default setting	
CO1 → F01	- 0 (without RF1)
CO1 → F02	- 1 (with AF1)
CO1 → F03	- 0 (without RüF1)
CO3 → F01	- 0 (without RF3)
CO3 → F02	- 1 (with AF1)
CO3 → F03	- 0 (without RüF3)
CO4 → F01	- 1 (with SF1)
CO4 → F02	- 0 (without SF2)
CO4 → F03	- 0 (without RüF2)
CO5 → F34, F35, F36, F37	Function AA1, AA2, AA3, AA4: – Control signal Y1 (RK1) – Control signal Y2 (RK2) – Control signal Y3 (RK3) – External demand — When CO1 → F18 - 1 – SLP speed — When CO4 → F21 - 1 – ZP speed — When CO4 → F25 - 1 – Outdoor temperature — When CO5 → F23 - 1 Direction 'Output'

System 21.2-1

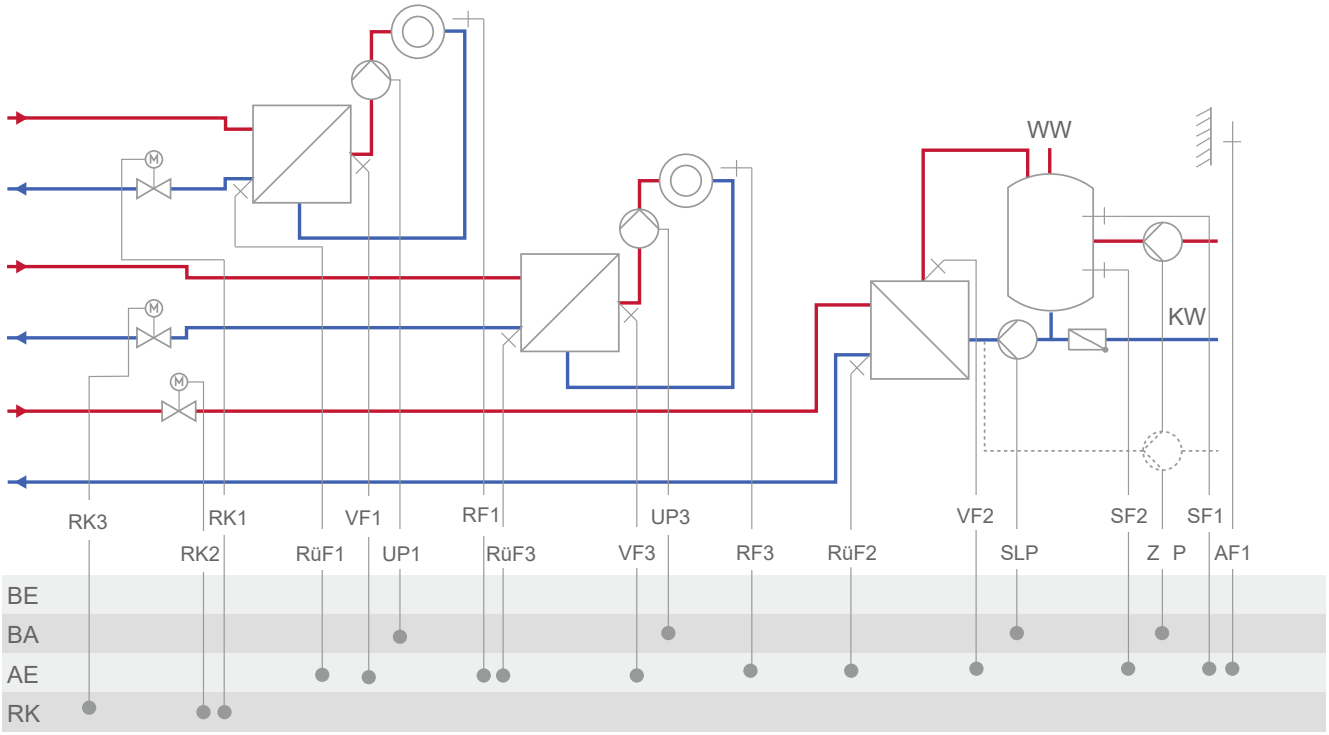
WW
KW
RK3
RK1
VF1
RF1
UP3
VF2
SF2
SF1
RK2
RüF1
UP1
RüF3
VF3
RF3
RüF2
SLP
Z
P
AF1
BE
BA
AE
RK

System	21.2-1
	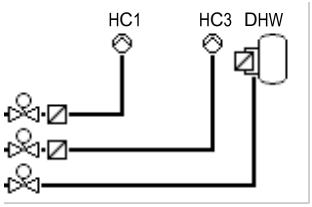
RK3: CO3 → F02 - 0 = Fixed set point control; CO3 → F02 - 1, select AF1 = Outdoor-temperature-compensated control with AF1; CO3→ F02 - 1, select AF2 = Outdoor-temperature-compensated control with AF2	
Default setting	
CO1 → F01	- 0 (without RF1)
CO1 → F02	- 1 (with AF1)
CO1 → F03	- 1 (with RüF1)
CO3 → F01	- 0 (without RF3)
CO3 → F02	- 1 (with AF1)
CO3 → F03	- 1 (with RüF3)
CO4 → F01	- 1 (with SF1)
CO4 → F02	- 1 (with SF2)
CO4 → F03	- 0 (without RüF2)
CO4 → F10	- 0 (DHW circulation return in storage tank)
CO5 → F34, F35, F36, F37	Function AA1, AA2, AA3, AA4: – Control signal Y1 (RK1) – Control signal Y2 (RK2) – Control signal Y3 (RK3) – External demand — When CO1 → F18 - 1 – SLP speed — When CO4 → F21 - 1 – ZP speed — When CO4 → F25 - 1 – Outdoor temperature — When CO5 → F23 - 1 Direction 'Output'

System 21.2-2

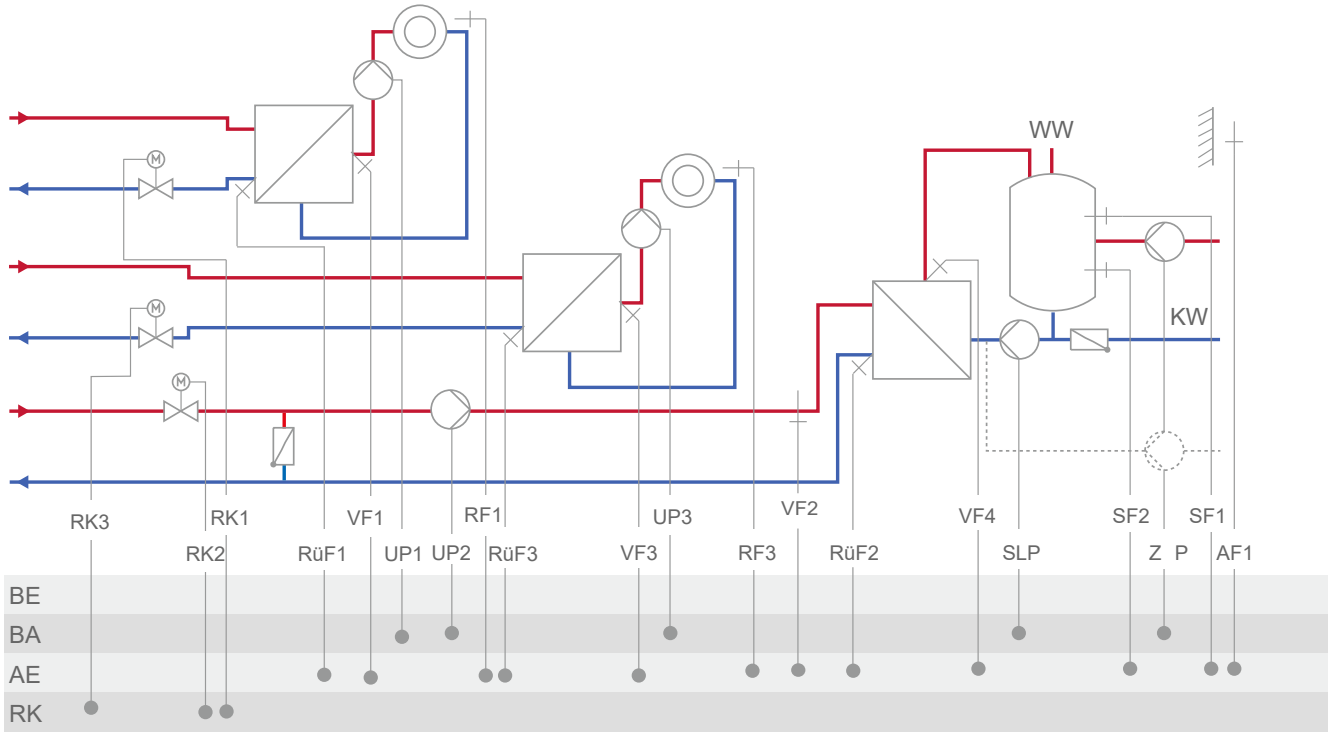
WW
KW
RK3
RK1
VF1
RF1
UP3
VF2
VF4
SF2
SF1
RK2
RüF1
UP1
UP2
RüF3
VF3
RF3
RüF2
SLP
Z
P
AF1
BE
BA
AE
RK

System	21.2-2
	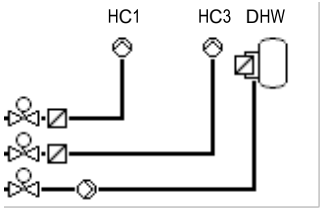
RK3: CO3 → F02 - 0 = Fixed set point control; CO3 → F02 - 1, select AF1 = Outdoor-temperature-compensated control with AF1; CO3→ F02 - 1, select AF2 = Outdoor-temperature-compensated control with AF2	
Default setting	
CO1 → F01	- 0 (without RF1)
CO1 → F02	- 1 (with AF1)
CO1 → F03	- 1 (with RüF1)
CO3 → F01	- 0 (without RF3)
CO3 → F02	- 1 (with AF1)
CO3 → F03	- 1 (with RüF3)
CO4 → F01	- 1 (with SF1)
CO4 → F02	- 1 (with SF2)
CO4 → F03	- 0 (without RüF2)
CO4 → F05	- 0 (without VF4; in this case, VF2 usually installed at the point of measurement of VF4)
CO4 → F10	- 0 (DHW circulation return in storage tank)
CO5 → F34, F35, F36, F37	Function AA1, AA2, AA3, AA4: – Control signal Y1 (RK1) – Control signal Y2 (RK2) – Control signal Y3 (RK3) – External demand — When CO1 → F18 - 1 – SLP speed — When CO4 → F21 - 1 – ZP speed — When CO4 → F25 - 1 – Outdoor temperature — When CO5 → F23 - 1 Direction 'Output'

System 21.2-3

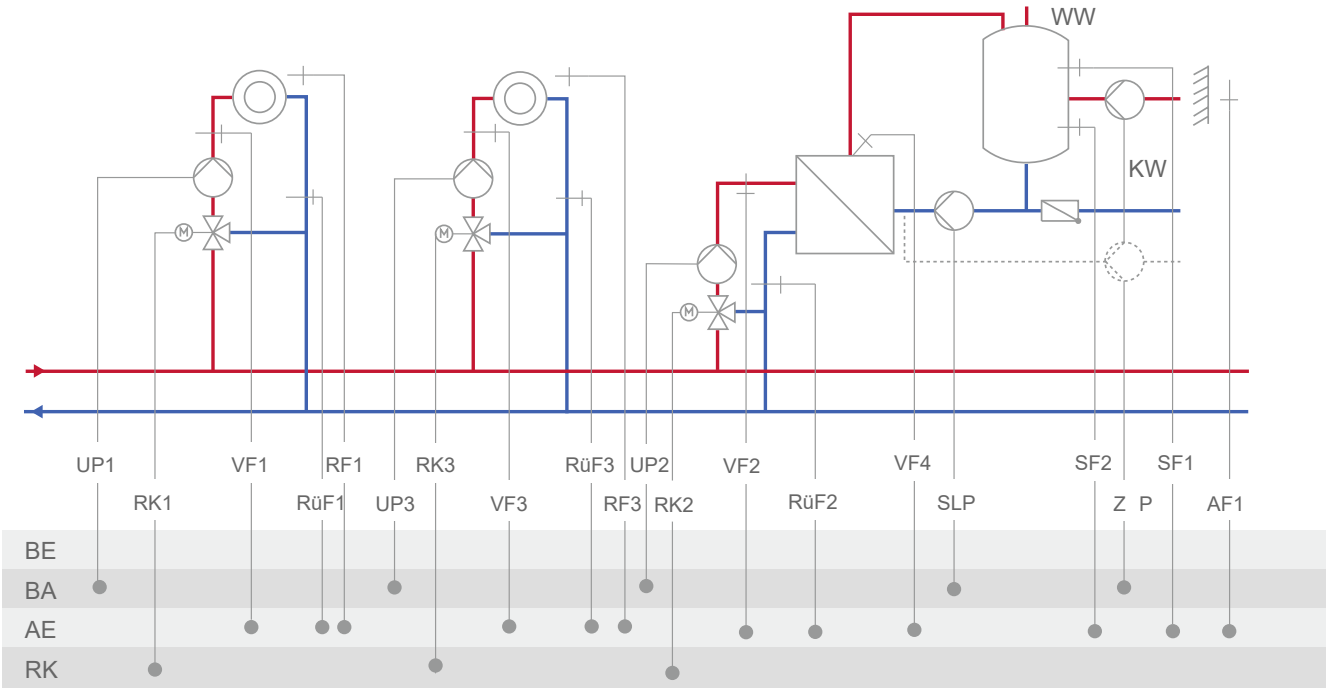
WW
KW
UP1
RK1
VF1
RF1
RüF1
RK3
UP3
VF3
RüF3
RF3
UP2
RK2
VF2
RüF2
VF4
SLP
SF2
Z
P
SF1
AF1
BE
BA
AE
RK

System	**21.2-3**
	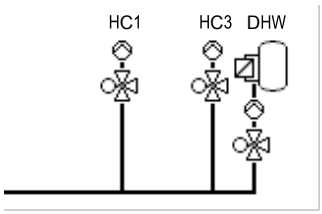
RK3: CO3 → F02 - 0 = Fixed set point control; CO3 → F02 - 1, select AF1 = Outdoor-temperature-compensated control with AF1; CO3→ F02 - 1, select AF2 = Outdoor-temperature-compensated control with AF2	
Default setting	
CO1 → F01	- 0 (without RF1)
CO1 → F02	- 1 (with AF1)
CO1 → F03	- 1 (with RüF1)
CO3 → F01	- 0 (without RF3)
CO3 → F02	- 1 (with AF1)
CO3 → F03	- 1 (with RüF3)
CO4 → F01	- 1 (with SF1)
CO4 → F02	- 1 (with SF2)
CO4 → F03	- 0 (without RüF2)
CO4 → F05	- 0 (without VF4; in this case, VF2 usually installed at the point of measurement of VF4)
CO4 → F10	- 0 (DHW circulation return in storage tank)
CO5 → F34, F35, F36, F37	Function AA1, AA2, AA3, AA4: – Control signal Y1 (RK1) – Control signal Y2 (RK2) – Control signal Y3 (RK3) – External demand — When CO1 → F18 - 1 – SLP speed — When CO4 → F21 - 1 – ZP speed — When CO4 → F25 - 1 – Outdoor temperature — When CO5 → F23 - 1 Direction 'Output'

System 21.9-1

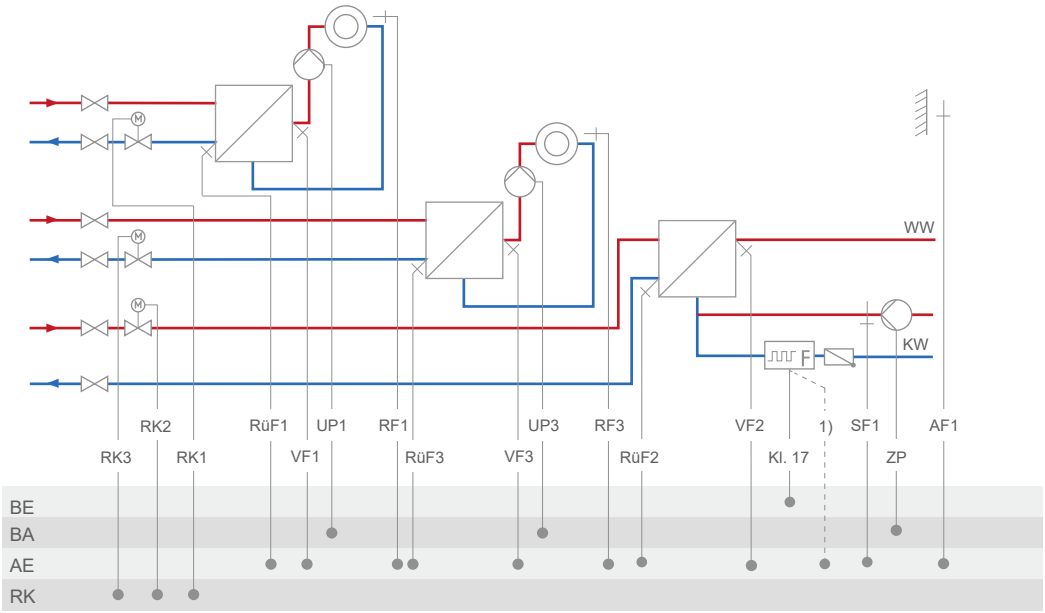

1) bei Vortex-Sensor Kl. 15, 16 oder 17

System	21.9-1
	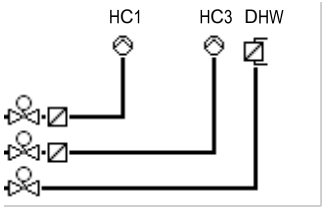
RK3: CO3 → F02 - 0 = Fixed set point control; CO3 → F02 - 1, select AF1 = Outdoor-temperature-compensated control with AF1; CO3→ F02 - 1, select AF2 = Outdoor-temperature-compensated control with AF2	
Default setting	
CO1 → F01	- 0 (without RF1)
CO1 → F02	- 1 (with AF1)
CO1 → F03	- 1 (with RüF1)
CO3 → F01	- 0 (without RF3)
CO3 → F02	- 1 (with AF1)
CO3 → F03	- 1 (with RüF3)
CO4 → F01	- 0 (without SF1)
CO4 → F03	- 0 (without RüF2)
CO4 → F04	- 0 (without water flow sensor)
CO5 → F07	- 0 (without error message at terminal 37)
CO5 → F34, F35, F36, F37	Function AA1, AA2, AA3, AA4: – Control signal Y1 (RK1) – Control signal Y2 (RK2) – Control signal Y3 (RK3) – 5 V supply – 10 V supply – External demand — When CO1 → F18 - 1 – ZP speed — When CO4 → F25 - 1 – Outdoor temperature — When CO5 → F23 - 1 Direction 'Output'

System 21.9-2

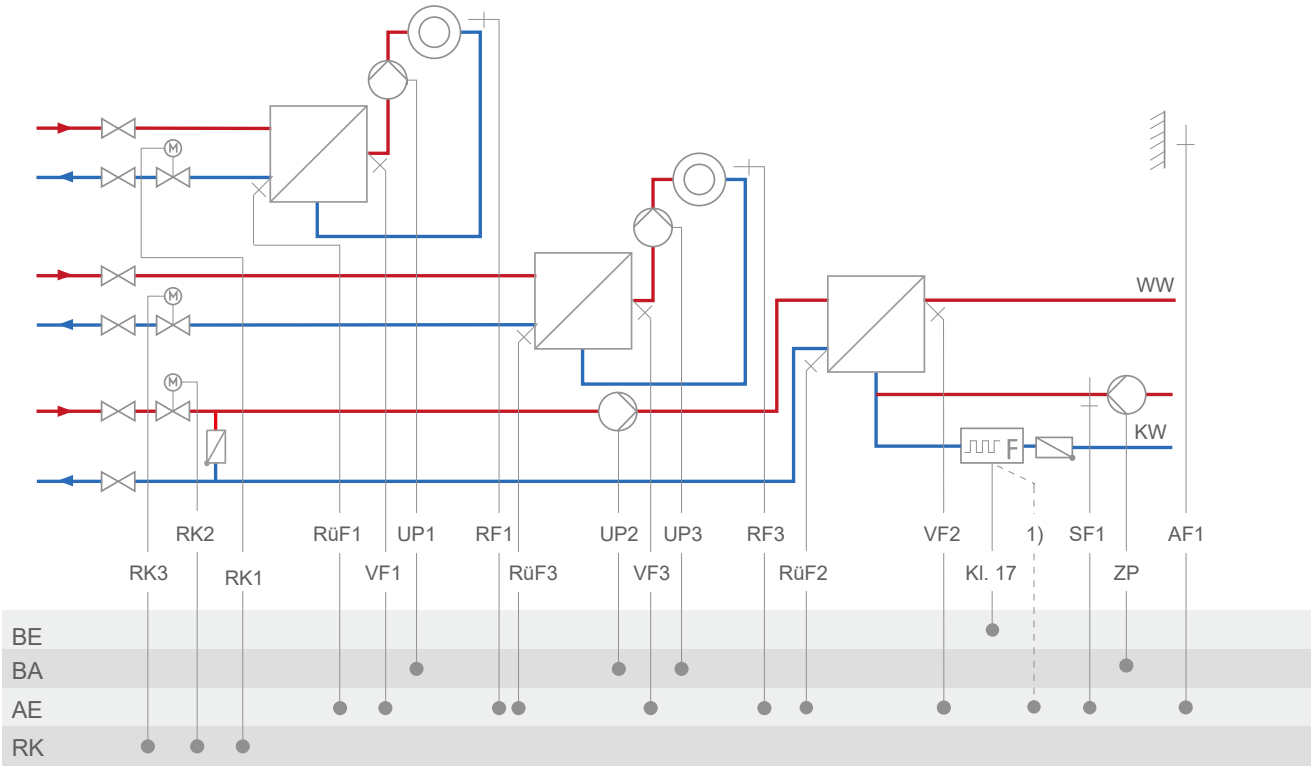

1) bei Vortex-Sensor Kl. 15, 16 oder 17

System	21.9-2
	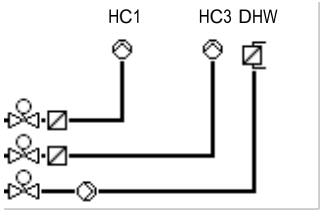
RK3: CO3 → F02 - 0 = Fixed set point control; CO3 → F02 - 1, select AF1 = Outdoor-temperature-compensated control with AF1; CO3→ F02 - 1, select AF2 = Outdoor-temperature-compensated control with AF2	
Default setting	
CO1 → F01	- 0 (without RF1)
CO1 → F02	- 1 (with AF1)
CO1 → F03	- 1 (with RüF1)
CO3 → F01	- 0 (without RF3)
CO3 → F02	- 1 (with AF1)
CO3 → F03	- 1 (with RüF3)
CO4 → F01	- 0 (without SF1)
CO4 → F03	- 0 (without RüF2)
CO4 → F04	- 0 (without water flow sensor)
CO5 → F07	- 0 (without error message at terminal 37)
CO5 → F34, F35, F36, F37	Function AA1, AA2, AA3, AA4: – Control signal Y1 (RK1) – Control signal Y2 (RK2) – Control signal Y3 (RK3) – 5 V supply – 10 V supply – External demand — When CO1 → F18 - 1 – ZP speed — When CO4 → F25 - 1 – Outdoor temperature — When CO5 → F23 - 1 Direction 'Output'

System 25.0-1

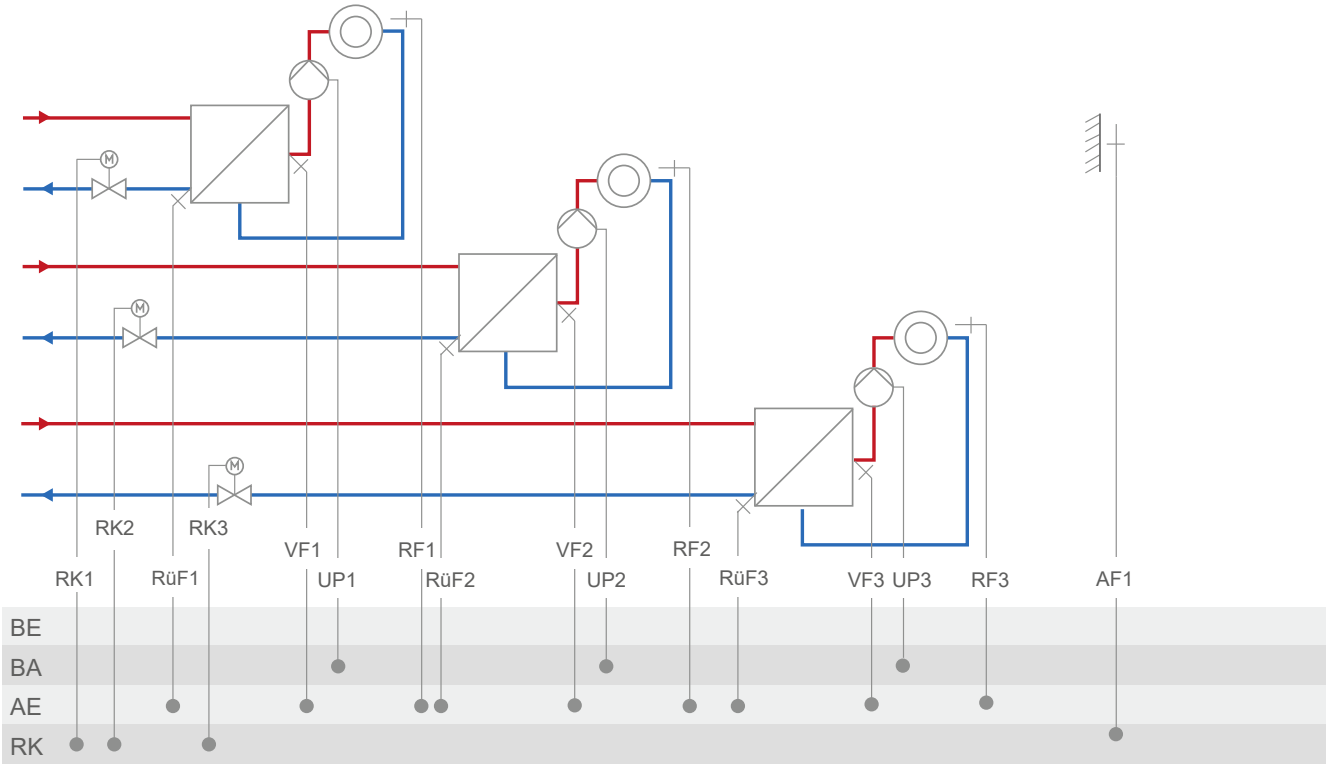
RK2
RK3
VF1
RF1
VF2
RF2
RK1
RüF1
UP1
RüF2
UP2
RüF3
VF3
UP3
RF3
AF1
BE
BA
AE
RK

System	25.0-1
	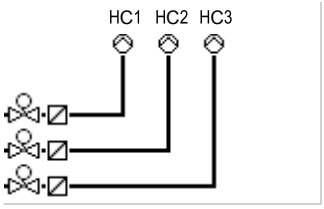
RK2: CO2 → F02 - 0 = Fixed set point control; CO2 → F02 - 1, select AF1 = Outdoor-temperature-compensated control with AF1; CO2→ F02 - 1, select AF2 = Outdoor-temperature-compensated control with AF2 RK3: CO3 → F02 - 0 = Fixed set point control; CO3 → F02 - 1, select AF1 = Outdoor-temperature-compensated control with AF1; CO3→ F02 - 1, select AF2 = Outdoor-temperature-compensated control with AF2	
Default setting	
CO1 → F01	- 0 (without RF1)
CO1 → F02	- 1 (with AF1)
CO1 → F03	- 1 (with RüF1)
CO2 → F01	- 0 (without RF2)
CO2 → F02	- 1 (with AF1)
CO2 → F03	- 1 (with RüF2)
CO3 → F01	- 0 (without RF3)
CO3 → F02	- 1 (with AF1)
CO3 → F03	- 1 (with RüF3)
CO5 → F07	- 0 (without error message at terminal 37)
CO5 → F34, F35, F36, F37	Function AA1, AA2, AA3, AA4: – Control signal Y1 (RK1) – Control signal Y2 (RK2) – Control signal Y3 (RK3) – External demand — When CO1 → F18 - 1 – Outdoor temperature — When CO5 → F23 - 1 Direction 'Output'

System 25.0-2

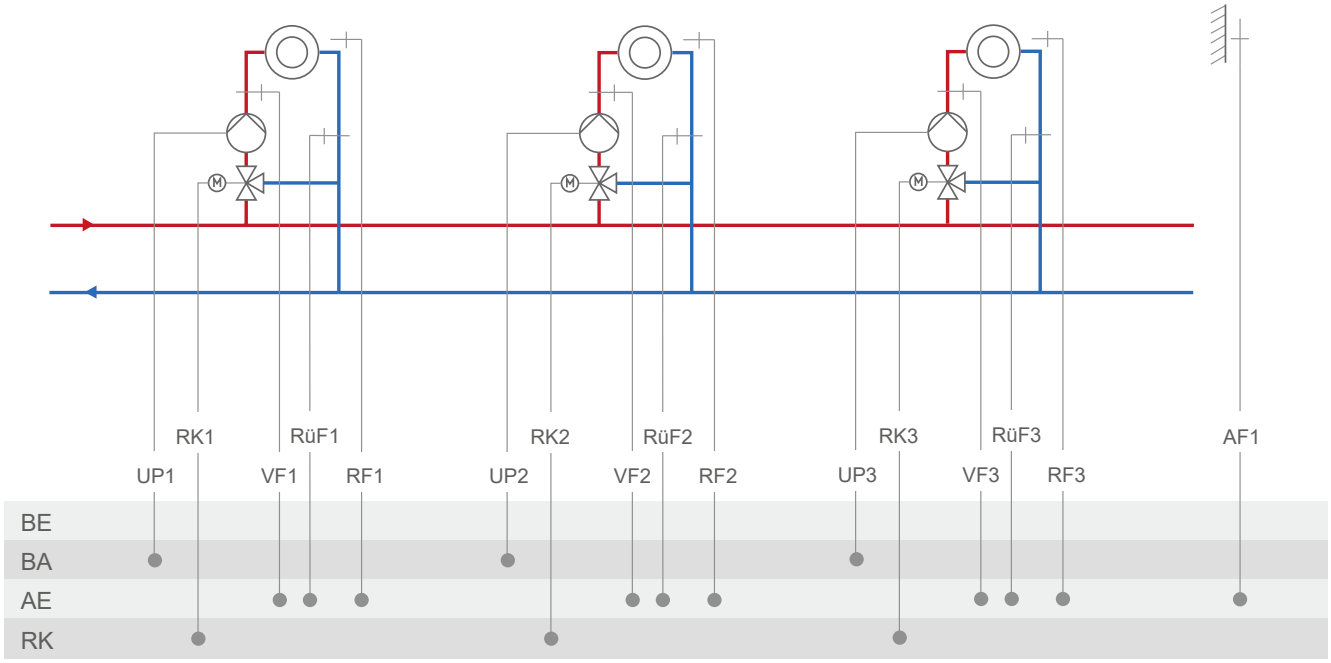

System	25.0-2
	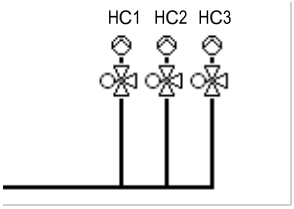
RK2: CO2 → F02 - 0 = Fixed set point control; CO2 → F02 - 1, select AF1 = Outdoor-temperature-compensated control with AF1; CO2→ F02 - 1, select AF2 = Outdoor-temperature-compensated control with AF2 RK3: CO3 → F02 - 0 = Fixed set point control; CO3 → F02 - 1, select AF1 = Outdoor-temperature-compensated control with AF1; CO3→ F02 - 1, select AF2 = Outdoor-temperature-compensated control with AF2	
Default setting	
CO1 → F01	- 0 (without RF1)
CO1 → F02	- 1 (with AF1)
CO1 → F03	- 1 (with RüF1)
CO2 → F01	- 0 (without RF2)
CO2 → F02	- 1 (with AF1)
CO2 → F03	- 1 (with RüF2)
CO3 → F01	- 0 (without RF3)
CO3 → F02	- 1 (with AF1)
CO3 → F03	- 1 (with RüF3)
CO5 → F07	- 0 (without error message at terminal 37)
CO5 → F34, F35, F36, F37	Function AA1, AA2, AA3, AA4: – Control signal Y1 (RK1) – Control signal Y2 (RK2) – Control signal Y3 (RK3) – External demand — When CO1 → F18 - 1 – Outdoor temperature — When CO5 → F23 - 1 Direction 'Output'

System 25.5

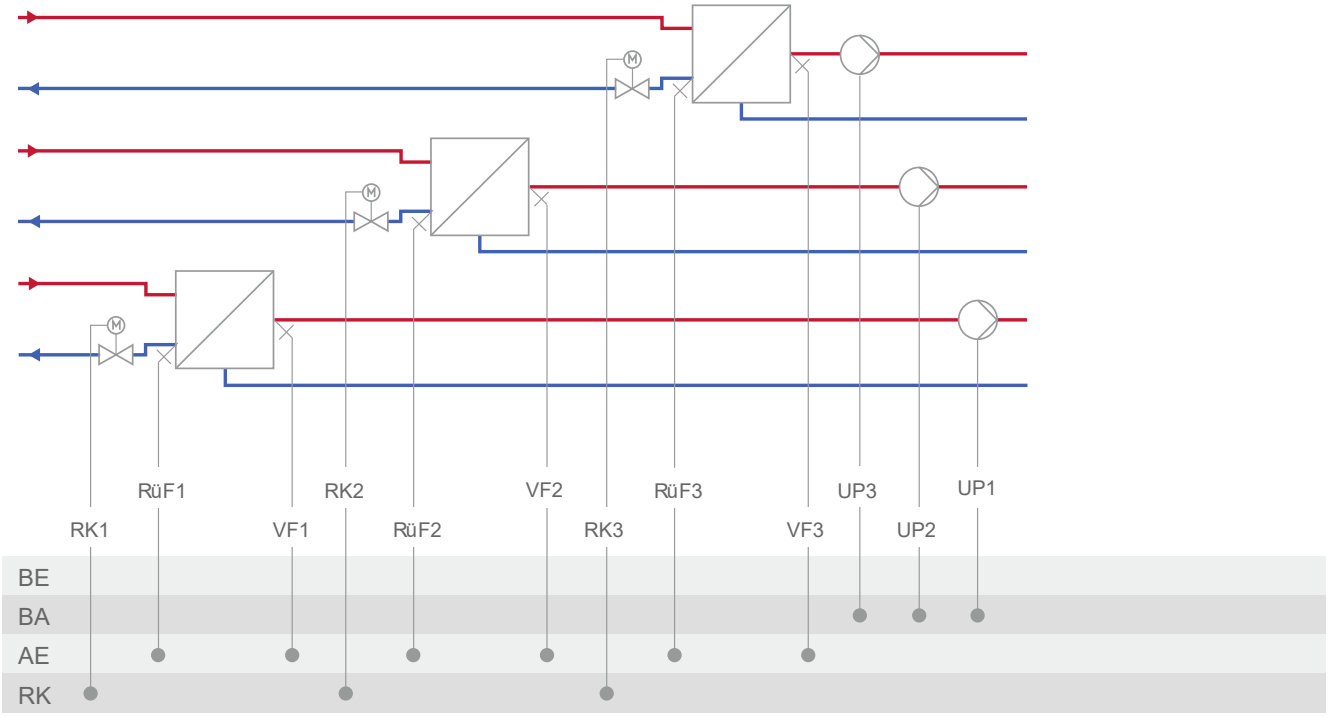

System	25.5
	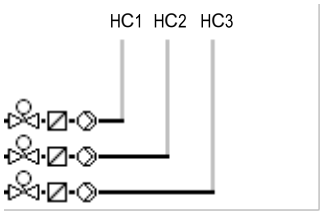
Default setting	
CO1 → F02	- 0 (without AF1)
CO1 → F03	- 1 (with RüF1)
CO2 → F02	- 0 (without AF1)
CO2 → F03	- 1 (with RüF2)
CO3 → F02	- 0 (without AF1)
CO3 → F03	- 1 (with RüF3)
CO5 → F07	- 0 (without error message at terminal 37)
CO5 → F34, F35, F36, F37	Function AA1, AA2, AA3, AA4: – Control signal Y1 (RK1) – Control signal Y2 (RK2) – Control signal Y3 (RK3) – External demand When CO1 → F18 - 1

System 27.1

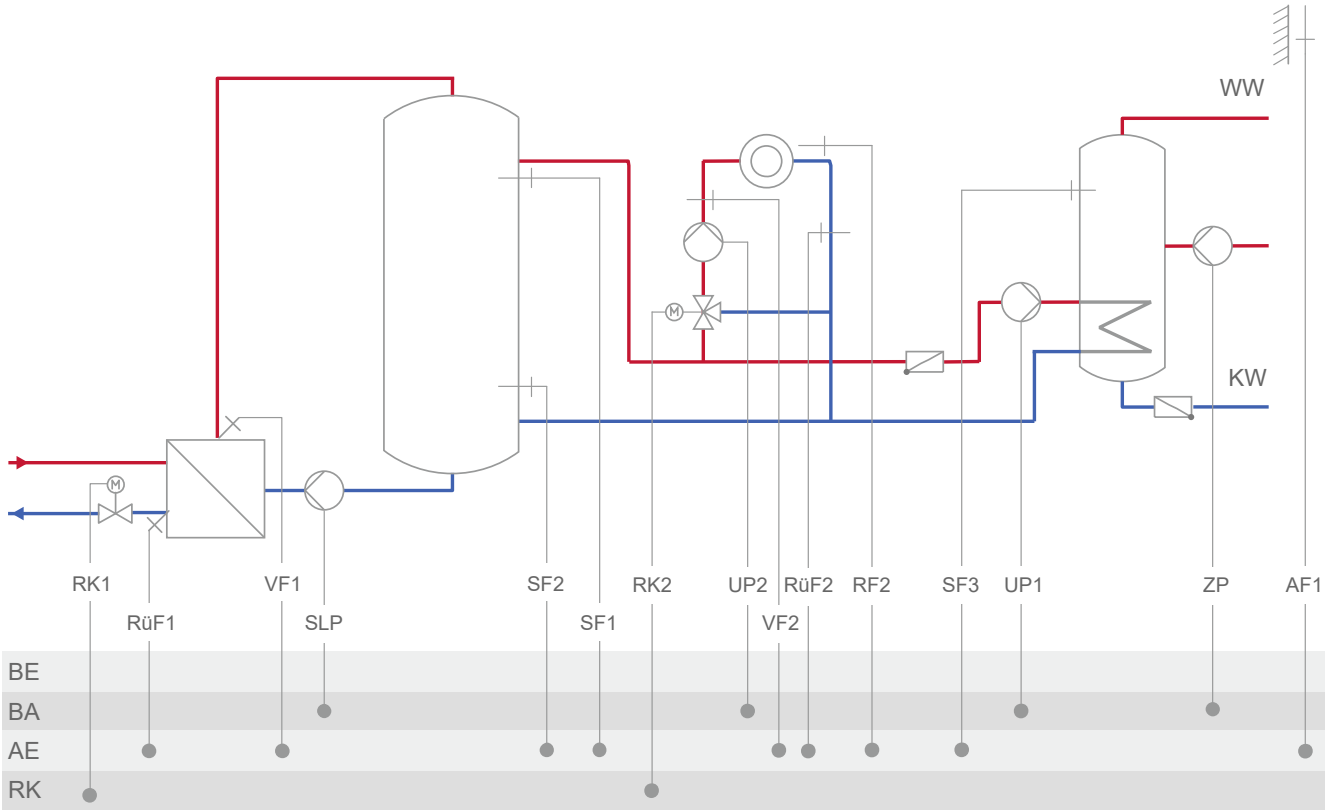

System	27.1
	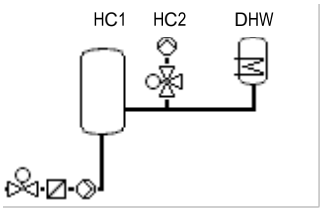
RK2: CO2 → F02 - 0 = Fixed set point control; CO2 → F02 - 1, select AF1 = Outdoor-temperature-compensated control with AF1; CO2→ F02 - 1, select AF2 = Outdoor-temperature-compensated control with AF2	
Default setting	
CO1 → F02	- 1 (with AF1)
CO1 → F03	- 1 (with RüF1)
CO1 → F06	- 1 (with SF2)
CO2 → F01	- 0 (without RF2)
CO2 → F02	- 1 (with AF1)
CO2 → F03	- 0 (without RüF2)
CO5 → F07	- 0 (without error message at terminal 46)
CO5 → F34, F35, F36, F37	Function AA1, AA2, AA3, AA4: – Control signal Y1 (RK1) – Control signal Y2 (RK2) – External demand — When CO1 → F18 - 1 – SLP speed — When CO1 → F21 - 1 – Outdoor temperature — When CO5 → F23 - 1 Direction 'Output'

System 27.8

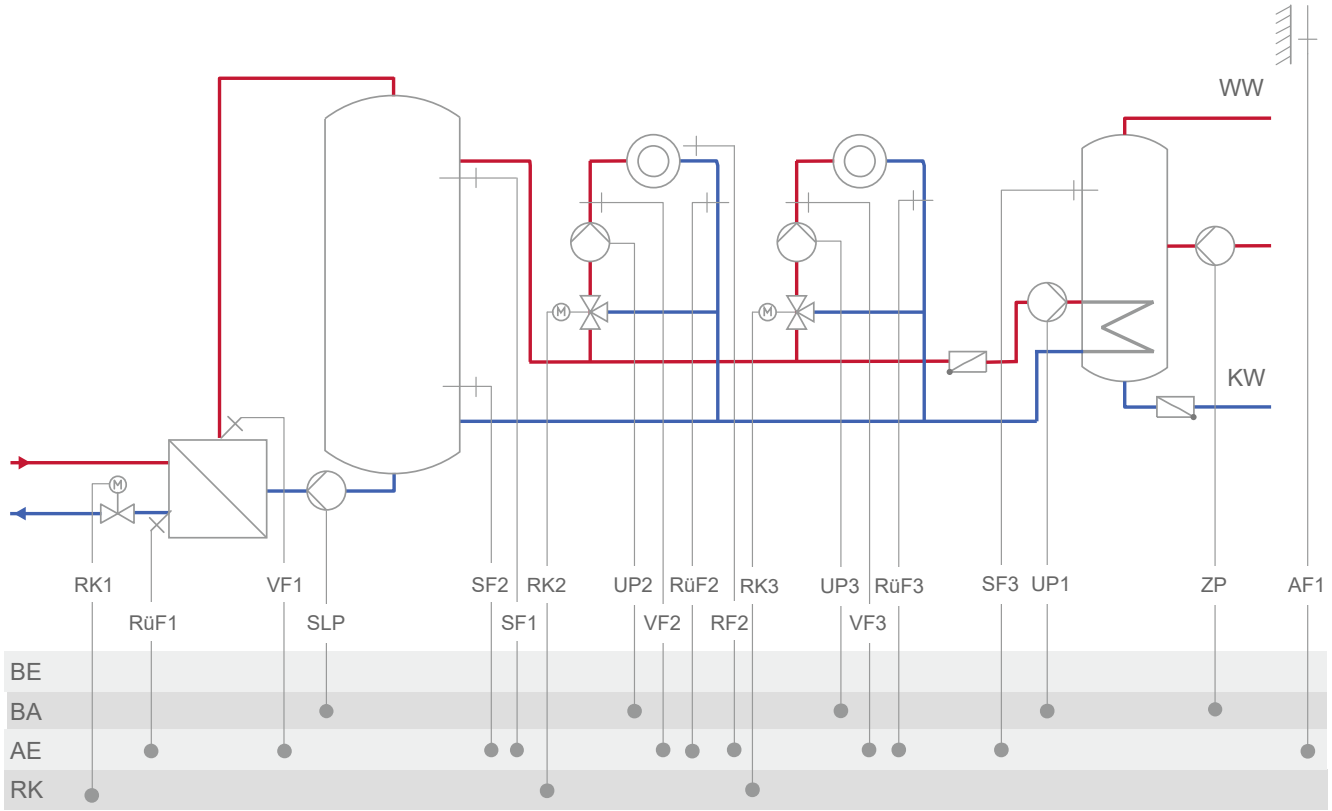
WW
KW
RK1
RüF1
VF1
SLP
SF2
SF1
RK2
UP2
VF2
RüF2
RF2
RK3
UP3
VF3
RüF3
SF3
UP1
ZP
AF1
BE
BA
AE
RK

System	27.8
	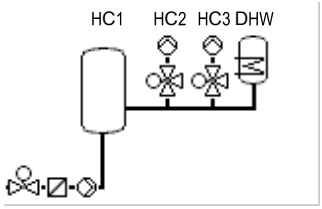
RK2: CO2 → F02 - 0 = Fixed set point control; CO2 → F02 - 1, select AF1 = Outdoor-temperature-compensated control with AF1; CO2→ F02 - 1, select AF2 = Outdoor-temperature-compensated control with AF2 RK3: CO3 → F02 - 0 = Fixed set point control; CO3 → F02 - 1, select AF1 = Outdoor-temperature-compensated control with AF1; CO3→ F02 - 1, select AF2 = Outdoor-temperature-compensated control with AF2	
Default setting	
CO1 → F02	- 1 (with AF1)
CO1 → F03	- 1 (with RüF1)
CO1 → F06	- 1 (with SF2)
CO2 → F01	- 0 (without RF2)
CO2 → F02	- 1 (with AF1)
CO2 → F03	- 0 (without RüF2)
CO3 → F02	- 1 (with AF1)
CO3 → F3	- 0 (without RüF3)
CO5 → F34, F35, F36, F37	Function AA1, AA2, AA3, AA4: – Control signal Y1 (RK1) – Control signal Y2 (RK2) – Control signal Y3 (RK3) – External demand — When CO1 → F18 - 1 – SLP speed — When CO1 → F21 - 1 – Outdoor temperature — When CO5 → F23 - 1 Direction 'Output'

16.2 Functions of the heating circuit

Which controller functions are available depends on the selected system code number.

16.2.1 Outdoor-temperature-compensated control

When outdoor-temperature-compensated control is used, the flow temperature is controlled based on the outdoor temperature. The heating characteristic in the heating controller defines the flow temperature set point as a function of the outdoor temperature (see Fig. 15).

The outdoor temperature required for outdoor-temperature-compensated control can either be measured at an outdoor sensor, received over the 0 to 10 V input (see Chapter 16.2.1.1) or a connected device bus (see Chapter 16.2.1.2).

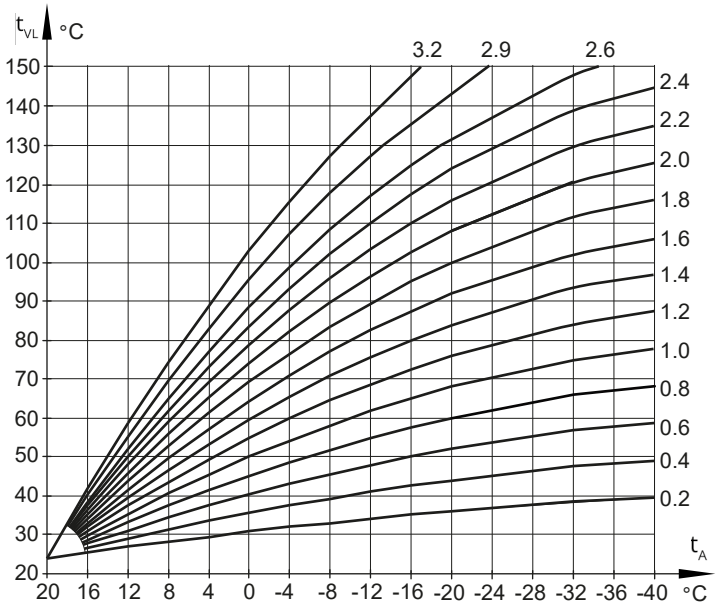

t_{VL}: Flow temperature
t_A: Outdoor temperature

Fig. 15: *Gradient characteristics*

16.2.1.1 Outdoor temperature received or sent as 0 to 10 V signal

The outdoor temperature can be received at AE3 as a 0 to 10 V signal. Alternatively, the temperature measured by the outdoor sensor can be issued at AA1, AA2, AA3 or AA4 as a 0 to 10 V signal. With the CO5 → F23 - 1 setting, Direction 'Output', the output AA1 is assigned for issuing the outdoor temperature signal. It is also possible to assign the analog output AA2, AA3 or AA4 instead.

The zero of the 0 to 10 V input and output signals can be shifted, if required.

Function	Default	Configuration
Outdoor sensor AF1, 2	1	CO1, 2, 3, 11, 12, 13 → F02 - 1 CO2, 3: select AF1, AF2
Send or receive outdoor temperature as 0 to 10 V signal	0	CO5 → F23 - 1
Send or receive outdoor temperature as 0 to 10 V signal	Input	Direction: Input (receive)
Send or receive outdoor temperature as 0 to 10 V signal	–20 °C	Lower transmission range: –50 to +100 °C
Send or receive outdoor temperature as 0 to 10 V signal	+50 °C	Upper transmission range: –50 to +100 °C
AE3 zero shift	0 5 %	CO5 → F33 - 1 Zero: 5 to 20 %
Send or receive outdoor temperature as 0 to 10 V signal	0	CO5 → F23 - 1
Send or receive outdoor temperature as 0 to 10 V signal	Input	Direction: Output (send)
Send or receive outdoor temperature as 0 to 10 V signal	–20 °C +50 °C	Lower transmission range: –50 to +100 °C Upper transmission range: –50 to +100 °C
AA1, AA2, AA3, AA4 reverse	0 0 %	CO5 → F25, F26, F27, F28 - 0 Zero: 0 to 50 %
AA1, AA2, AA3, AA4 PWM	0	CO5 → F34, F35, F36, F37 - 0 Function: Outdoor temperature

16.2.1.2 Send or receive outdoor temperature over device bus

The measured outdoor temperature can be provided to other heating controllers over the device bus.

Function	Default	Configuration
Outdoor sensor AF1, 2	1	CO1, 2, 3, 11, 12, 13 → F02 - 1 CO2, 3: select AF1, AF2
Device bus	0	CO7 → F01 - 1, device bus address
Receive value AF1	0	CO7 → F07 - 1, register number
Send value AF1	0	CO7 → F06 - 1, register number
Receive value AF2	0	CO7 → F09 - 1, register number
Send value AF2	0	CO7 → F08 - 1, register number

1) Send outdoor temperature received as 0 to 10 V signal by device bus with CO5 → F23 1 setting and analog input (AE)

16.2.1.3 Gradient characteristic

Basically, the following rule applies:

A decrease in the outdoor temperature causes the flow temperature to increase in order to keep the room temperature constant. By varying the 'Gradient' and 'Level' parameters, you can adapt the characteristic to your individual requirements.

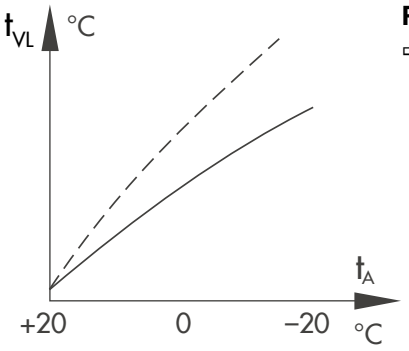

Room temperature dropping in cold season

⇨ Raise the gradient

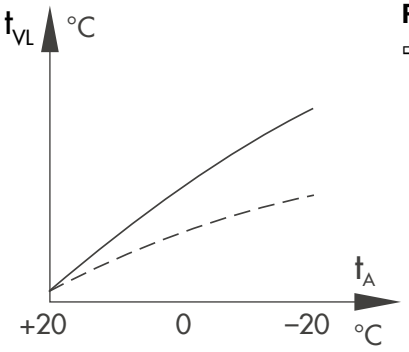

Room temperature rising in cold season

⇨ Decrease the gradient

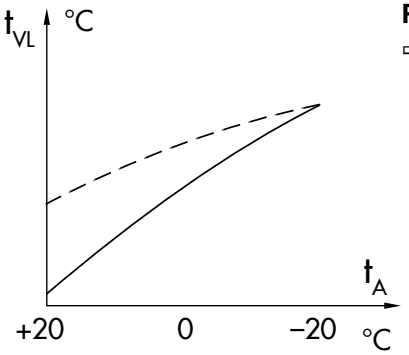

Room temperature dropping between seasons

⇨ Raise the level and decrease the gradient

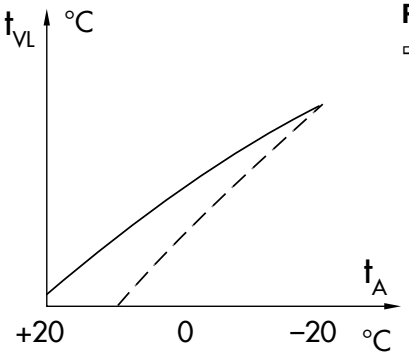

Room temperature rising between seasons

⇨ Decrease the level and raise the gradient

Outside the times-of-use, reduced set points are used for control:

The reduced flow set point is calculated as the difference between the adjusted values for 'Day set point' (rated room temperature) and 'Night set point' (reduced room temperature). The 'Max. flow temperature' and 'Min. flow temperature' parameters mark the upper and lower limits of the flow temperature. A separate gradient characteristic can be selected for the limitation of the return temperature.

Examples for adjusting the characteristic:

- Old building, radiator design 90/70: Gradient approx. 1.8
- New building, radiator design 70/55: Gradient approx. 1.4
- New building, radiator design 55/45: Gradient approx. 1.0
- Underfloor heating depending on arrangement: Gradient <0.5

Note

Particularly for control operation without room sensor, the room temperatures set for day ('Day set point') and night ('Night set point') only become effective satisfactorily when the heating characteristic has been adapted to the building/heating surface layout.

Function	Default	Configuration
Four-point characteristic	0	CO1, 2, 3, 11, 12, 13 → F11 - 1

Parameters	Default	Switch position: value range
Day set point	20.0 °C	0.0 to 40.0 °C
Night set point	15.0 °C	0.0 to 40.0 °C

Parameters	Default	Parameter level: value range
Flow gradient		
Flow gradient	1, 2 [1)]	PA1, 2, 3, 11, 12, 13 → P01: 0.2 to 3.2
Level (parallel shift)	0.0 °C	PA1, 2, 3, 11, 12, 13 → P02: –30.0 to +30.0 °C
Min. flow temperature	+20.0 °C	PA1, 2, 3, 11, 12, 13 → P06: –5.0 to +150.0 °C
Max. flow temperature	70.0 °C [1)]	PA1, 2, 3, 11, 12, 13 → P07: 5.0 to 150.0 °C

1) When CO1, 2, 3, 11, 12, 13 → F05 - 1, the following applies:
Flow gradient: 0.2 to 1.0 (0.5)
Max. flow temperature: 5.0 to 50.0 °C (50.0 °C)

16.2.1.4 Four-point characteristic

The four-point characteristic allows you to define your own heating characteristic. It is defined by four points for the outdoor temperature, flow temperature, reduced flow temperature and return temperature. The 'Max. flow temperature' and 'Min. flow temperature' parameters mark the upper and lower limits of the flow temperature.

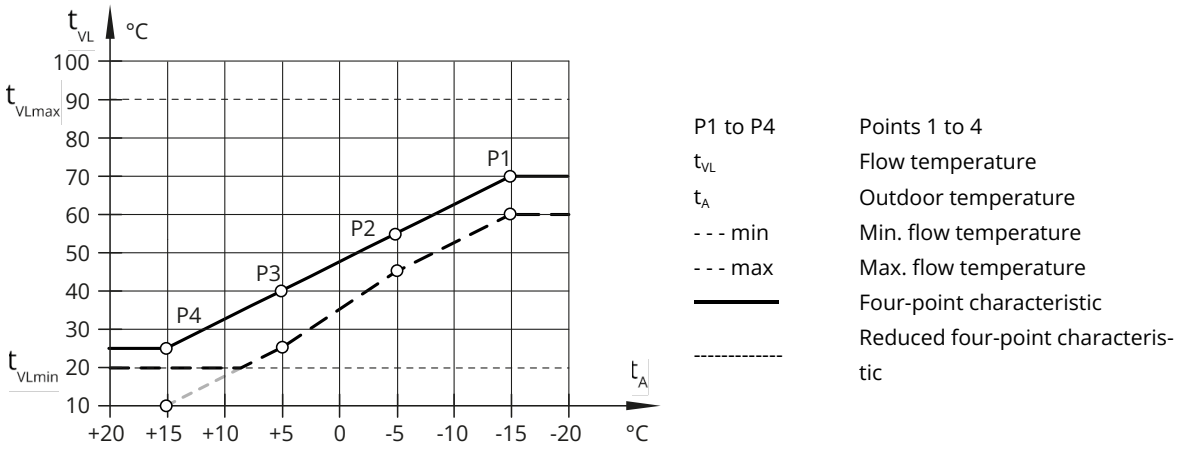

Fig. 16: *Four-point characteristic*

i *Note*

- *The 'Day set point' and 'Night set point' parameters are no longer available when the four-point characteristic has been selected when no additional functions (e.g. optimization, flash adaptation) have been selected.*
- *The Four-point characteristic function can only be activated when the adaptation function is not active (CO1, 2, 3, 11, 12, 13 → F08 - 0).*

Function	Default	Configuration
Adaptation	0	CO1, 2 → F08 - 0 CO1, 2, 3, 11, 12, 13 → F08 - 0
Four-point characteristic	0	CO1, 2 → F011- 1 CO1, 2, 3, 11, 12, 13 → F11 - 1

Parameters		Default	Parameter level: value range
Outdoor temperature	Point 1	–15.0 °C	PA1, 2, 3, 11, 12, 13 → P05: –50.0 to +50.0 °C
	Point 2	–5.0 °C	
	Point 3	+5.0 °C	
	Point 4	+15.0 °C	
Flow temperature	Point 1	+70.0 °C	PA1, 2, 3, 11, 12, 13 → P05: –5.0 to +150.0 °C
	Point 2	+55 °C	
	Point 3	+40.0 °C	
	Point 4	+25.0 °C	
Reduced flow temperature	Point 1	+60.0 °C	PA1, 2, 3, 11, 12, 13 → P05: –5.0 to +150.0 °C
	Point 2	+40 °C	
	Point 3	+20.0 °C	
	Point 4	+20.0 °C	
Return temperature	Points 1 to 4	65.0 °C	PA1, 2, 3, 11, 12, 13 → P05: –5.0 to +150.0 °C
Min. flow temperature		+20.0 °C	PA1, 2, 3, 11, 12, 13 → P06: –5.0 to +150.0 °C
Max. flow temperature		70.0 °C [1)]	PA1, 2, 3, 11, 12, 13 → P07: 5.0 to 150.0 °C

1) When CO1, 2, 3, 11, 12, 13 → F05 - 1, the following applies:
Max. flow temperature: 5.0 to 50.0 °C (50 °C)

16.2.2 Fixed set point control

During the times-of-use, the flow temperature can be controlled according to a fixed set point. Outside the times-of-use, the reduced flow temperature is controlled. Set the desired rated flow temperature as 'Day set point' and the reduced flow temperature as 'Night set point'.

Function	Default	Configuration
Outdoor sensor	1	CO1, 2, 3, 11, 12, 13 → F02 - 0

Parameters	Default	Switch position: value range
Day set point	50.0 °C	Min. to max. flow temperature
Night set point	30.0 °C	Min. to max. flow temperature

Parameters	Default	Parameter level: value range
Min. flow temperature	+20.0 °C	PA1, 2: –5.0 to +150.0 °C PA1, 2 → P06: –5.0 to +150.0 °C PA1, 2, 3, 11, 12, 13 → P06: –5.0 to +150.0 °C
Max. flow temperature	70.0 °C	PA1, 2: 5.0 to 150.0 °C PA1, 2 → P07: 5.0 to 150.0 °C PA1, 2, 3, 11, 12, 13 → P07: 5.0 to 150.0 °C

16.2.3 Underfloor heating/drying of jointless floors

The CO1, 2, 3, 11, 12, 13 → F05 - 1 setting defines the respective heating circuit as an underfloor heating circuit. In doing so, the controller at first only limits the value ranges of the heating characteristic gradient and the maximum flow temperature in PA1 2, 3, 11, 12 and 13 parameter levels:

- Value range of the gradient: 0.2 to 1.0
- Value range of the maximum flow temperature: 5 to 50 °C

Furthermore, it is possible to set a **Boost** between 0.0 to 50.0 °C, which is additionally taken into account when there is a heat demand for the underfloor heating circuit of an upstream control circuit.

The **Drying of jointless floors** function can be activated afterwards. The function block parameters (starting with the **Start temperature**) determine the drying process. The first heating up phase starts at the entered 'Start temperature', which has a flow temperature of 25 °C (default setting). The start temperature is kept constant for the days entered in 'Hold (days)'. Afterwards, this temperature is raised by the value entered in 'Temp. rise/day' within 24 hours, e.g. the default setting causes the flow temperature set point to rise to 30 °C 24 hours after the holding phase. If the maximum temperature is reached, it is kept constant for the number of days entered in 'Hold (days)'. The 'Temp. reduction/day' parameter determines the temperature reduction. If the 'Temp. reduction/day' is set to 0, the temperature holding phase changes directly to the automatic mode. If the function block parameter 'Start temperature' is set to 25 °C and 'Temp. rise/day' to 0.0 °C, the drying function runs as specified in DIN EN 1264-4:

The drying of jointless floors function starts with a flow temperature of 25 °C. This temperature is kept constant for three days. Afterwards, the controller switches to the maximum temperature adjusted. The process continues unchanged.

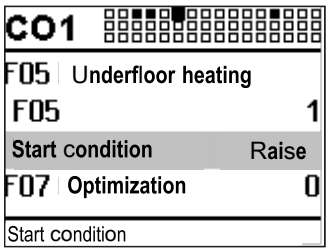

The **Drying of jointless floors** function is activated with the entered 'Start temperature' by changing the default setting from 'Stop' to 'Start'. 'Start' appears on the display after the process starts. The restarting stages 'Raise', 'Hold' (holding the maximum temperature) and 'Reduction' can be selected to continue an interrupted drying process. The course of the drying process can be monitored in the operating level by reading the measured data of the associated heating circuit.

i ***Note***

The function block parameter can only be accessed after starting the function by resetting to 'Stop' in CO1, 2, 3, 11, 12, 13 → F05.

Function	Default	Configuration
Underfloor heating/drying of jointless floors	0 0.0 °C 25.0 °C 0 5.0 °C 45.0 °C 4 0.0 °C Stop	CO1, 2, 3, 11, 12, 13 → F05 - 1 Boost: 0.0 to 50.0 °C Start temperature: 20.0 to 60.0 °C Hold (days): 0 to 10 days Temp. rise/day: 0.0 to 20.0 °C Maximum temperature: 25.0 to 60.0 °C Hold (days): 0 to 30 days Temp. reduction/day: 0.0 to 20.0 °C Start condition: Stop, Start, Raise, Hold, Reduction

16.2.4 Night set-back

The night set-back (= difference between the target flow temperature in day and night mode) is calculated in all heating circuits with a gradient characteristic as follows:

2x Heating characteristic gradient x (day room temperature – night room temperature)

16.2.4.1 Outdoor temperature for continuous day mode

If a heating circuit is in night mode (automatic mode, ⏲), this circuit is switched to day mode whenever the outdoor temperature falls below the limit 'Outdoor temperature for continuous day mode'. The night mode restarts after the outdoor temperature rises above the limit (plus 0.5 °C hysteresis).

This function prevents the building from cooling down excessively outside the times-of-use when low outdoor temperatures occur. The transition towards day mode can be configured to be variable depending on the outdoor temperature.

Parameters	Default	Parameter level: value range
Outdoor temperature for continuous day mode	–15.0 °C	PA1, 2, 3, 11, 12, 13 → P09: –50.0 to +5.0 °C (only when CO1, CO2, CO3, CO11, CO12, CO13 → F28 - 0)

16.2.4.2 Variable night set-back

The CO1, CO2, CO3, CO11, CO12, CO13 → F28 - 1 setting causes the night set-back to be variable based on the decreasing outdoor temperature.

The night set-back is fully effective at outdoor temperatures above the outdoor temperature limit value 'OTL night 100 %'. The absolute value of the night set-back is linearly reduced to zero in the range between this value and the outdoor temperature limit value 'OTL night 0 %' for continuous day mode.

The absolute value of the night set-back is indicated in the 'Night set points' menu as 'HCx night set-back'. It is also indicated during day mode, but has no effect.

By configuring CO1, CO2, CO3, CO11, CO12, CO13 → F28 - 1, the 'Outdoor temperature for continuous day mode' (P09) parameter is not used in the corresponding PA level.

Function	Default	Configuration
Variable night set-back	0 +5.0 °C –15 °C	CO1, CO2, CO3, CO11, CO12, CO13 → F28 - 1 (only when CO1, CO2, CO3, CO11, CO12, CO13 → F11 - 0) OTL night 100 %: –50 to +20 °C

16.2.4.3 Smooth transition

The transition from night to day or vice versa may cause major changes to the set point. Major changes to the flow temperature set point create energy peaks, which cause loud noises in the heating system.

The CO5 → F41 - 1 setting helps avoid abrupt changes to the set point of heating circuits due to the change from day to night mode or vice versa based on the programmed time schedule.

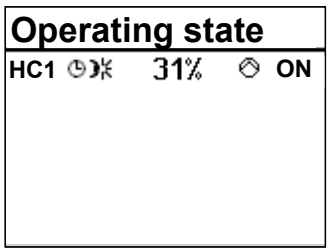

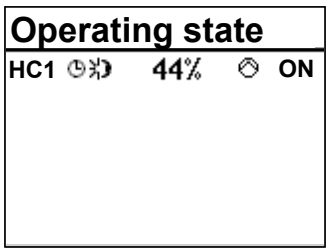

The 'Day-night' parameter determines the runtime of the linear set point change from the current day to the night set point starting at the programmed end of the time-of-use.

The 'Night-day' parameter determines the runtime of the set point change from the current night to the day mode starting correspondingly earlier than the programmed start of the time-of-use.

An active smooth transition function is indicated by the following icon combination:

Night-day ramp
Day-night ramp

'Mode: Night-day' or 'Mode: Day-night' is indicated on the display in the operating level of the heating circuit(s).

Function	Default	Configuration
Smooth transition	0 30 min 30 min	CO5 → F41 - 1 (only when CO1, CO2, CO3, CO11, CO12 , CO13 → F29 - 0) Day-night: 0 to 240 min Night-day: 0 to 240 min

16.2.4.4 Rapid heat-up

This function can be configured separately for each heating circuit. It helps shorten the heating-up time by temporarily raising the flow set point for day mode. The 'Duration' parameter determines how long the system runs with the raised flow temperature during the transition to day mode. The 'Raise' parameter determines how high (percent) the normal flow set point is to be raised for day mode.

The rapid heat-up is only active once within 24 hours at the first mode change from night to day mode. It starts either automatically based on the programmed time schedule or due to a manual mode change. An active rapid heat-up function is indicated by a blinking sun icon.

In the operating level of the heating circuit concerned, 'Mode: Day' is indicated without any further information.

i ***Note***

Only one of the functions 'Rapid heat-up', 'Optimization' or 'Smooth transition' can be used for a heating circuit at one time.

Function	Default	Configuration
Rapid heat-up	0	CO1, CO2, CO3, CO11, CO12 , CO13 → F29 - 1 (only when CO1, CO2, CO3, CO11, CO12 , CO13 → F07 - 0 and CO5 → F41 - 0)
	45 min	Duration: 10 to 120 min
	30 %	Raise: 1 to 100 %

16.2.5 Buffer tank systems

A heating characteristic based on a gradient or four entered points can be set in PA1 for the buffer tanks in systems 3.8, 3.9, 5.9, 14.1 bis 14.3, 15.1 bis 15.5, 16.x, 17.x, 18.x and 20.0. A buffer tank set point for day mode and a buffer tank set point for night mode can be set without outdoor sensors in the customer level.

An external demand transmitted from secondary controlled heating circuits, from the DHW circuit or an external request (by device bus, 0 to 10 V or binary signal) can override the current buffer tank set point. The maximum demand is indicated as the buffer tank set point for SF1. If the temperature falls below the buffer tank set point at SF1, charging of the buffer tank is started. This does not apply to systems 3.8, 3.9, 5.9, 18.x and 20.0. In these systems, the buffer tank set point is only determined by the DHW circuit.

In systems 14.1 to 14.3 and 15.1 to 15.5, the set point of the charging temperature is always 6 °C higher than the buffer tank set point. Each charging of the buffer tank finishes as soon as the temperature at the top buffer tank sensor is +3 °C higher than the buffer tank set point (bottom buffer tank sensor in systems 15.4 and 15.5). If charging of the DHW storage tank is demanded in systems 14.1 to 14.3 and 15.1 to 15.3, it is first checked whether there is enough heat in the buffer tank to charge the DHW storage tank. The DHW storage tank is charged by the district heating system if the temperature in the buffer tank is insufficient for charging. The charging of the DHW storage tank has priority over a charging demand of the buffer tank. The buffer tank is charged once the DHW storage tank charging has been completed. In systems 14.3 and 15.3, a solar circuit with re-routable heat exchanger flow is integrated. If the temperature difference between the collector circuit sensor RüF2 and one of the storage tank sensors SF3 or SF4 is greater than the value of 'Solar circuit pump ON', the solar circuit pump UP2 is activated and the corresponding storage tank is charged. If both storage tanks can be charged, the DHW storage tank charging has priority. If the temperature difference falls below the value of 'Solar circuit pump OFF' in both storage tank circuits, the solar circuit pump UP2 is deactivated again. Basically, the solar circuit pump is deactivated when the measured temperatures of both storage tank sensors SF3 and SF4 have reached the 'Max. storage tank temperature' or 'Maximum buffer tank temperature' or when the solar collector temperature rises above 120 °C.

In systems 3.8, 3.9, 5.9, 16.x, 17.x, 18.x and 20.0, the set point of the charging temperature is determined by the 'Minimum set point to charge buffer tank' parameter setting in the PA1 level. The automatic adaptation ('AUTO' setting) causes the set point of the charging temperature to always be above the current buffer tank set point by the value entered in 'Charging temperature boost'. Every other value entered in 'Minimum set point to charge buffer tank' is used as the minimum set point for the charging temperature which first starts to be variable at higher buffer tank set points. When a return temperature sensor RüF1 is used, the charging pump SLP (CO1 → F22 - 1) is first released to avoid cold charging when the temperature measured at RüF1 has reached the same temperature measured at SF1.

In systems 3.8, 3.9 and 5.9 this function only applies when the heating circuits RK2 and RK3 are not running. The 'Stop charging of the buffer tank' parameter (PA1 → P17, default = AUTO) determines under which conditions the charging of the buffer tank is stopped. The automatic adaptation ('AUTO' setting) causes the buffer tank charging to be stopped when the temperature in the buffer tank reaches the 'Buffer tank set point' + 3 °C. Every other value entered for 'Stop charging of the buffer tank' is rated as a fixed switch-off temperature for the buffer tank charging. When SF2 (CO1 → F06 - 1) is configured, SF2 is used to stop the charging of the buffer tank. If the temperature falls below the buffer tank set point at SF1 while the temperature measured at SF2 is still greater than the value in 'Stop charging of the buffer tank', charging is not stopped until the temperature is 3° C lower than the buffer tank set point at SF1.

The CO1 → F25 - 1 setting causes the buffer tank bottom sensor SF3 to be activated, which can be used to stop buffer tank charging at low outdoor temperatures. In this way, the buffer tank is not completely charged in summer mode with SF2 as a switch-off sensor to keep the return temperature low at the end of the buffer tank charging. The storage tank charging pump SLP is not switched off until the lag time (entered 'Valve transit time T_V' for RK1 multiplied by the value of 'Lag time of charging pump') has elapsed. An activated discharging protection function (CO1 → F27 - 1) causes the charging to be stopped when the charging temperature does not reach its set point even though the valve is fully open or it falls below the temperature measured at SF1 and does not rise again. Charging with the valve fully open is stopped after one hour at the latest. In such cases, 'Operation: discharging protection' is displayed with the measured values in HC1 for the next 30 minutes.

The CO1 → F27 - 1 setting causes a 2 °C higher charging set point to be calculated. The following then applies:

Charging set point = Set point at SF1 + 'Charging temperature boost' + 2 °C

The operation of the feeder pump UP1 in systems 16.0 to 16.5, 16.7 and 16.8 is either determined by the time schedule of the circulation pump ZP or by an external demand. For systems with downstream control circuits, either only this external demand or the demand of the downstream control circuits causes the feeder pump UP1 to be activated, depending on the CO5 → F14 setting.

To switch on the pump UP2 of the solid fuel boiler circuit in systems 14.1, 14.2, 15.1, 15.2, 16.2, 16.4, 16.5 and 16.7, the temperature at VF2 must reach at least the temperature determined by PA5 → P01 + 0.5 °C if the buffer tank (SF1) is cold.

If the temperature at SF1 is already reached, the temperature at VF2 must be greater than the temperature at SF1 + PA5 → P02 + 3 °C to switch on the pump UP2.

The pump UP2 is switched off again when the temperature at VF2 is lower than the temperature at SF1 + PA5 → P02 – 3 °C or it falls below the value PA5 → P01.

In systems 14.3, 15.3, 16.3, 16.4, 16.6 and 16.7, a solar circuit is integrated, which uses sensor SF3 for control. The solar circuit pump is activated when the temperature at the collector sensor RüF2 is higher than that at the storage tank sensor SF3 by the value entered in 'Solar circuit pump ON'. It is deactivated when the temperature difference falls below the value entered in 'Solar circuit pump OFF', when the temperature at the storage tank sensor SF3 reaches 'Max. storage tank temperature' or when the collector temperature rises above 120 °C.

The analog output AA4 for the heat exchanger charging pump is used to control the DHW temperature in systems 3.7, 3.8, 3.9, 5.9, 17.x, 18.x and 20.0. It is also possible to assign the analog output AA1, AA2 or AA3 instead. A PWM signal or a 0 to 10 V signal can be configured, which can also be reversed, if required. For

operation of the heat exchanger charging pump, the minimum delivery rate and the control parameters to control the DHW temperature can adjusted by configuring CO4 → F12 - 1.

The CO4 → F04 - 1 setting can be used to activate either a flow switch, a water flow sensor (1400-9246) or a vortex flow sensor. When a vortex flow sensor is used to measure the rate of hot water being tapped, enter the 'Lower range value' and 'Upper range value' for the measuring range settings based on the data provided in the data sheet of the vortex flow sensor. The expected rate of hot water that will actually be tapped is entered in the 'Processing start' and 'Processing end' parameters. If the vortex flow sensor is installed so that it not only measures the flow rate of the cold water but also the circulation flow rate, the 'Processing start' parameter can be used to exclude the measurement of the circulation flow rate.

A vortex flow sensor can be powered over the analog output ('5 V supply' function) provided its maximum load at the analog output concerned is 20 mA and the total load of all outputs is not greater than 40 mA. A flow switch only allows the control of the DHW temperature to be activated outside the times-of-use of the circulation pump.



By activating a water flow sensor or a vortex flow sensor, the ratio control function is automatically activated (CO4 → F28 - 1). This function then controls the heat exchanger charging pump depending on the rate of hot water being tapped. The 'Lower range value' function block parameter determines the rate of hot water being tapped, which stops the 100 % temperature control when small amounts of hot water are tapped and uses the ratio control instead. The 'Upper range value' function block parameter determines the rate of hot water being tapped for 100 % delivery rate of the heat exchanger charging pump. The 'Minimum speed' parameter determines the delivery rate of the heat exchanger charging pump when the flow rate of the tapped hot water is the same as the 'Lower range value' parameter.
The CO4 → F29 - 1 setting is used to configure an on/off cycle mode of the heat exchanger charging pump when very low amounts of hot water are tapped (e.g. circulation flow only). The function block parameters 'ON time' and 'OFF time' of the heat exchanger charging pump as well as 'Limit for T control' for the transition to continuous temperature control need to be configured.

The AA1 analog output is used for adapting the delivery rate of the charging pump SLP based on the temperature. It is also possible to assign the analog output AA2, AA3 or AA4 instead. A PWM signal or a 0 to 10 V signal can be configured, which can also be reversed, if required.

The output UP1 for the changeover valve is activated by configuring the return temperature sensor RüF2. The changeover valve is controlled based on the 'Return temperature limit, layering at top' parameter: If the temperature measured at RüF2 exceeds the adjusted switching point, the output UP1 remains deactivated and the return water is layered at the top.

After the temperature measured at RüF2 has fallen below the switching point, the output UP1 is activated and the return water is layered at the bottom.

The CO4 → F14 - 1 setting activates the **Thermal disinfection** function as well as the input RüF3 required for this function. It may be necessary for the heating controller to initially ensure at the start of every thermal disinfection that a sufficiently high temperature exists in the buffer tank. Therefore, enough time for the thermal disinfection process must be available.

Alternatively, in systems 3.7, 3.8, 3.9, 17.x, 18.x and 20.0, an electric heating cartridge can be used for the thermal disinfection process. The CO4 → F23 - 1 setting is used to determine that the increased heat demand by the DHW circuit during an active thermal disinfection is not passed on to the buffer tank circuit RK1. The temperature measured at SF1 determines when the electric heating is demanded at the start of a thermal disinfection process and during the entire thermal disinfection process:

There is no demand for electric heating when the temperature at SF1 is ≥ 'Disinfection temperature' (function block parameter in CO4 → F14) + 'Set point boost' (function block parameter in CO4 → F14). When the temperature at SF1 is below this limit, the binary output BA10 is activated to demand electric heating.

In system 20.0, the control parameters for the mixing valve can be found in function block CO4 → F36. The set point at VF2 is calculated from the 'DHW temperature' + 7 °C, the 'Buffer set point' at SF1 (from the set point of the mixing circuit + 'Set point boost (pre-control circuit)' (PA1 → P15, default: 5 °C).

i *Note*

The buffer tank control circuit is deactivated as described in Chapter 16.2.4.1. When predefined gradients of the heating characteristic (CO1 → F11 - 0) are used, night mode is not possible in the buffer tank control circuit. In contrast to an active four-point characteristic (CO1 → F11 - 1): in this case, a four-point characteristic exists for day and night modes.

Function	Default	Configuration
Storage tank sensor SF2	1	CO1 → F06 - 1
Speed control of the charging pump	0	CO1 → F21 - 1
	40.0 °C	Start speed reduction Limit: 5.0 to 90.0 °C
	50.0 °C	Stop speed reduction Limit: 5.0 to 90.0 °C
	20.0 °C	Minimum speed: 0 to 50 %
SLP depending on return temperature	0	CO1 → F22 - 1
Buffer tank bottom sensor	0	CO1 → F25 - 1 Buffer tank bottom sensor SF3 active
	10.0 °C	Limit temperature: 0.0 to 50.0 °C
Discharging protection	0	CO1 → F27 - 1
Return sensor RüF2	0	CO4 → F03 - 1
Water flow sensor	0	CO4 → F04 - 1 Sensor: Binary = (flow switch at terminals 17/18) Analog (= water flow sensor 1400-9246) 0 to 10 V/2 to 10 V (= vortex flow sensor) 0 to 20 mA/4 to 20 mA (= vortex flow sensor; 50 Ω parallel to the analog input) When a vortex flow sensor is used: Analog input 1, 2, 3 (3) Lower range value: 0 to 10 V or 0 to 20 mA (adjustable in steps of 0.1) Lower range value: 0 to 250 l/min (adjustable in steps of 1 l/min) Upper range value: 0.1 to 10 V or 0.1 to 20 mA (adjustable in steps of 0.1) Upper range value: 0 to 250 l/min (adjustable in steps of 1 l/min) Processing start: 0 to 25 l/min (adjustable in steps of 0.1 l/min) Processing start: 0 to 250 l/min (adjustable in steps of 1 l/min)
Three-step control mode	1	CO4 → F12 - 1
	20 %	Minimum speed: 0 to 50 %
	2.0	K_P: 0.1 to 50.0
	120 s/30 s	T_n: 1 to 999 s
	0 s	T_V: 0 to 999 s
Electric heating cartridge	0	CO4 → F23- 1
Control parameters RK2		CO4 → F36 - 0/1
	0.6	K_P (gain): 0.1 to 50.0
	12 s	T_n (reset time): 30 to 2000 s
	0 s	T_V (derivative-action time): 0 to 999 s
	20 s	T_Y (valve transit time): 15, 20, 25, ..., 240 s
Ratio control	0	CO4 → F28 - 1 Lower range value: 0 to 250 l/min Upper range value: 1 to 250 l/min Minimum speed: 0 to 100 %
DHW on/off cycle mode	0	CO4 → F29 - 1 ON time: 1 to 250 s OFF time: 1 to 250 s Limit for T control: 1 to 250 l/min
ZP on/off cycle mode	0	CO4 → F30 - 1 ON time: 2 to 30 min OFF time: 2 to 30 min
AA1, AA2, AA3, AA4 reverse	0	CO5 → F25, F26, F27, F28 - 1
	0 %	Zero: 0 to 50 %
AA1, AA2, AA3, AA4 PWM	0	CO5 → F34, F35, F36, F37 - 1 Function: SLP speed, 'Y4', 3 V supply, 5 V supply, 10 V supply

Parameters	Default	Parameter level: value range
Minimum set point to charge buffer tank	AUTO	PA1 → P16: AUTO to 90.0 °C
Stop charging of the buffer tank	AUTO	PA1 → P17: AUTO to 90.0 °C
Charging temperature boost	6.0 °C	PA1 → P18: 0 to 50.0 °C
Lag time of charging pump	1.0	PA1 → P19: 0.0 to 10.0
Max. return temperature during active storage tank charging	65 °C	PA1 → P20: 5.0 to 90.0 °C
Solar circuit pump ON	10.0 °C	PA4 → P10: 1.0 to 30.0 °C
Solar circuit pump OFF	3.0 °C	PA4 → P11: 0.0 to 30.0 °C
Max. storage tank temperature	80.0 °C	PA4 → P12: 20.0 to 90.0 °C
Maximum buffer tank temperature	80.0 °C	PA4 → P13: 20.0 to 90.0 °C
Return temperature limit, layering at top	25.0 °C	PA4 → P21: 5.0 to 90.0 °C
Start temperature for boiler pump	60.0 °C	PA5 → P01: 20.0 to 90.0 °C
Boiler pump hysteresis	5.0 °C	PA5 → P02: 0.0 to 30.0 °C

16.2.6 Summer mode

Summer mode is activated depending on the mean daytime temperature (measured between 7.00 h and 22.00 h) during the adjusted summer time period.

If the mean daytime temperature exceeds the 'Boost' on the number of successive days set in 'No. days until activation', summer mode is activated on the following day. This means that the valves in all heating circuits are closed and the circulation pumps are switched off after t = 2 x valve transit time.

If the mean daytime temperature falls below the 'Limit' on the number of successive days set in 'No. days until deactivation', summer mode is deactivated on the following day.

Function	Default	Configuration
Summer mode	0	CO5 → F04 - 1
	01.06 - 30.09	Time: Adjustable as required
	2	No. days until activation: 1 to 3
	1	No. days until deactivation: 1 to 3
	18.0 °C	Limit: 0.0 to 30.0 °C

i ***Note***

Summer mode only becomes effective when the controller is in automatic mode (⏲).

16.2.7 Delayed outdoor temperature adaptation

The calculated outdoor temperature is used to determine the flow temperature set point. The heating response is delayed when the outdoor temperature either increases or decreases or both. If the outdoor temperature varies by, for example 12 °C within a very short period of time, the calculated outdoor temperature is adapted to the actual outdoor temperature in small steps (delay time of 3 °C per hour) over the following time period:

$$t = \frac{12\ °C}{3\ °C/h} = 4\ h$$

i Note

The delayed outdoor temperature adaptation helps avoid unnecessary overloads of central heating stations in combination with either overheated buildings occurring, for example due to warm winds or temporarily insufficient heating due to the outdoor sensor being exposed to direct sunshine.

In the operating level, the outdoor temperature reading blinks on the display while delayed outdoor temperature adaptation is active.

A small hour glass appears next to the thermometer on the display when this function is active.

The calculated outdoor temperature is displayed.

After a controller restart, this function takes effect after a delay of 1 to 2 minutes.

Function	Default	Configuration
Delayed outdoor temperature adaptation (decreasing)	0	CO5 → F05 - 1 Delay/h: 0.2 to 6.0 °C
Delayed outdoor temperature adaptation (increasing)	0 3.0 °C	CO5 → F06 - 1 Delay/h: 0.2 to 6.0 °C

16.2.8 Remote operation

Apart from measuring the room temperature, the Type 5257-5 [1)] Room Panel, Type 5257-51 Room Panel (Pt1000) and Type 5244 [1)] Room Panel (PTC) provide the following opportunities of influencing the control process:

Selecting the operating mode:
- Automatic mode
- Day mode
- Night mode

Set point correction: During rated operation, the room temperature set point can be increased or reduced by up to 5 °C using a continuously adjustable rotary knob.

With an activated room sensor, the measured room temperature is displayed when the remote operation is connected and activated. Nevertheless, it is not used for control when either the **optimization**, **adaptation** or **flash adaptation** function is activated.

Alternatively, the TROVIS 5570 [1)] Room Panel can be connected over meter bus (see Chapter 16.4.15).

Function	Default	Configuration
Room sensor	0	CO1, 2, 3, 11, 12, 13 → F01 - 1
The following needs to be additionally configured if a TROVIS 5570 Room Panel is to be used:		
Device bus	0	CO7 → F01 - 1, device bus address
TROVIS 5570 Room Panel in RK1	0	CO7 → F03 - 1, device bus address
TROVIS 5570 Room Panel in RK2	0	CO7 → F04 - 1, device bus address
TROVIS 5570 Room Panel in RK3	0	CO7 → F05 - 1, device bus address

i Note

Room panels cannot be used for the heating circuits RK11, RK12 and RK13.

[1)] No longer available

16.2.9 Optimization

This function requires the use of a room sensor. Depending on the building characteristics, the heating controller determines and adapts the required advance heating time (maximum 8 hours) to ensure that the desired 'Day set point' (rated room temperature) has been reached in the reference room when the time-of-use starts. During the advance heating period, the controller heats with the max. flow temperature. This temperature is built up in steps of 10 °C. As soon as the 'Day set point' has been reached, outdoor-temperature-compensated control is activated.

Depending on the room sensor, the heating controller switches off the heating system up to one hour before the time-of-use ends. The heating controller chooses the deactivation time such that the room temperature does not drop significantly below the desired value until the time-of-use ends.

During the advance heating period and the premature deactivation of the heating system, the ☼ or ☾ icon blinks on the display.

Outside the times-of-use, the heating controller monitors the 'Night set point' (reduced room temperature). When the temperature falls below the night set point, the controller heats with the max. flow temperature until the measured room temperature exceeds the adjusted value by 1 °C.

i *Note*

- *Direct sunshine can cause the room temperature to increase and thus result in the premature deactivation of the heating system.*
- *When the room temperature decreases while the heating system is shortly outside its times-of-use, this can prematurely cause the controller to heat up to the 'Day set point'.*

Function	Default	Configuration
Room sensor	0	CO1, 2, 3, 11, 12, 13 → F01 - 1
Outdoor sensor	1	CO1, 2, 3, 11, 12, 13 → F02 - 1 CO1, 2 → F02 - 1
Optimization	0	CO1, 2, 3, 11, 12, 13 → F07 - 1

Parameters	Default	Switch position: value range
Day set point	20.0 °C	🌡☼ 0.0 to 40.0 °C
Night set point	15.0 °C	🌡☾ 0.0 to 40.0 °C

16.2.10 Flash adaptation

To ensure that the controller reacts immediately to room temperature deviations during day and night mode, the function block setting CO1, 2, 3, 11, 12, 13 → F09 - 1 needs to be made.

The heating is then always switched off as soon as the room temperature exceeds the 'Day set point' or 'Night set point' by 2 °C.

Heating first starts again when the room has cooled off and the room temperature is 1 °C above the set point. Corrections of the flow temperature set point are released after the 'Cycle time' or 'Gain K_P' are set to a value ≠ 0. The 'Cycle time' determines the intervals at which the flow temperature set point is corrected by 1 °C. 'Gain K_P' set to ≠ 0 causes a direct increase/decrease in flow temperature set point when a sudden deviation in room temperature arises. A 'Gain K_P' setting of around 10.0 is recommended.

i *Note*

- *Cooling loads, such as drafts or open windows, affect the control process.*
- *Rooms may be temporarily overheated after the cooling load has been eliminated.*

Function	Default	Configuration
Room sensor	0	CO1, 2, 3, 11, 12, 13 → F01 - 1
Outdoor sensor	1	CO1, 2, 3, 11, 12, 13 → F02 - 1
Flash adaptation	0	CO1, 2, 3, 11, 12, 13 → F09 - 1
	20 min	Cycle time: 0 to 100 min
	0.0	K_P (gain): 0.0 to 25.0

Parameters	Default	Switch position: value range
Day set point	20.0 °C	0.0 to 40.0 °C
Night set point	15.0 °C	0.0 to 40.0 °C

16.2.10.1 Flash adaptation without outdoor sensor (based on room temperature)

The flow temperature control starts with 'Flow set point (day)' in day mode or with 'Flow set point (night)' in night mode as no set points calculated using characteristics exist without an outdoor sensor. The 'Cycle time' determines the intervals at which the flow temperature set point is corrected by 1 °C. The heating is then always switched off as soon as the room temperature exceeds the 'Day set point' or 'Night set point' by 2 °C.

Heating first starts again when the room has cooled off and the room temperature is 1 °C above the set point. A 'Gain K_P' set to ≠ 0 causes a direct increase/decrease in flow temperature set point when a sudden deviation in room temperature arises. A 'Gain K_P' setting of around 10.0 is recommended.

Function	Default	Configuration
Room sensor	0	CO1, 2, 3, 11, 12, 13 → F01 - 1
Outdoor sensor	1	CO1, 2, 3, 11, 12, 13 → F02 - 0
Flash adaptation	0	CO1, 2, 3, 11, 12, 13 → F09 - 1
	20 min	Cycle time: 1 to 100 min
	0.0	K_P (gain): 0.0 to 25.0

Parameters	Default	Switch position: value range
Day set point	20.0 °C	0.0 to 40.0 °C
Night set point	15.0 °C	0.0 to 40.0 °C

Parameters	Default	Parameter level: value range
Flow set point (day)	50.0 °C	PA1, 2, 3, 11, 12, 13 → P03: 5.0 to 150.0 °C
Flow set point (night)	30.0 °C	PA1, 2, 3, 11, 12, 13 → P04: 5.0 to 150.0 °C
		PA1, 2 → P04: –5.0 to +150.0 °C

16.2.11 Adaptation

The heating controller is capable of automatically adapting the heating characteristic to the building characteristics.

A gradient characteristic must be set in this case (CO1, 2, 3, 11, 12, 13 → F11 - 0).

The reference room, where the room sensor is located, represents the entire building and is monitored to ensure that the room temperature set point ('Day set point') is maintained. When the mean measured room temperature in rated operation deviates from the adjusted set point, the heating characteristic is modified accordingly for the following time-of-use.

The corrected value is displayed in PA1, 2, 3, 11, 12, 13 → P01 ('Flow gradient').

Function	Default	Configuration
Room sensor	0	CO1, 2, 3, 11, 12, 13 → F01 - 1
Outdoor sensor	1	CO1, 2, 3, 11, 12, 13 → F02 - 1
Adaptation	0	CO1, 2, 3, 11, 12, 13 → F08 - 1
Four-point characteristic	0	CO1, 2, 3, 11, 12, 13 → F11 - 0

Parameters	Default	Switch position: value range
Day set point	20.0 °C	0.0 to 40.0 °C
Night set point	15.0 °C	0.0 to 40.0 °C

Note

If the Flash adaptation function is already configured with a small cycle time, the Adaptation function should not be configured as well.

16.2.12 Cooling control

Cooling control with outdoor sensor

When the cooling control function is activated in a control circuit with outdoor sensor, the four-point characteristic of the corresponding control circuit is automatically activated and the operating direction of the control output is reversed.

In PA1, PA2 and/or PA3 the four points for the course of the set point based on the outdoor temperatures can be adjusted separately for day and night mode.

The 'Base point for return temperature' that can be adjusted with an active return sensor determines the point at which a minimum limitation of the return temperature starts:

If the measured return temperature falls below this value, the flow temperature set point is raised. The four return temperature values in the four-point characteristic function have no effect.

Function	Default	Configuration
Outdoor sensor	1	CO1, 2 → F02 - 1
Cooling control	0	CO1, 2, 3 → F04 - 1
Four-point characteristic	0	CO1, 2, 3 → F11 - 1

Parameters	Default		Parameter level: value range
Outdoor temperature	Point 1	+5.0 °C	PA1, 2, 3 → P05: –50.0 to +50.0 °C
	Point 2	+15.0 °C	
	Point 3	+25.0 °C	
	Point 4	+35.0 °C	
Flow temperature	Point 1	+20.0 °C	PA1, 2, 3 → P05: –5.0 to +150.0 °C
	Point 2	+15.0 °C	
	Point 3	+10.0 °C	
	Point 4	+5.0 °C	
Reduced flow temperature	Point 1	+30.0 °C	PA1, 2, 3 → P05: –5.0 to +150.0 °C
	Point 2	+25.0 °C	
	Point 3	+20.0 °C	
	Point 4	+15.0 °C	
Base point for return temperature		65.0 °C	PA1, 2, 3 → P13: 5.0 to 90.0 °C

Note

The limiting factors 'K_P' of the return sensor functions (CO1, 2, 3 → F03) apply during cooling control as well.

Cooling control without outdoor sensor

When the cooling control function is activated in a control circuit without outdoor sensor, only the adjustment limits for the day and night set points at the rotary switch as well as the 'Base point for return temperature' can be adjusted in PA1, PA2 and/or PA3.

Function	Default	Configuration
Outdoor sensor	1	CO1, 2, 3 → F02 - 0
Cooling control	0	CO1, 2, 3 → F04 - 1

Parameters	Default	Switch position: value range
Flow set point (day)	+20.0 °C	-5.0 to +150.0 °C
Flow set point (night)	+30.0 °C	-5.0 to +150.0 °C

Parameters	Default	Parameter level: value range
Min. flow temperature	+20.0 °C	PA1, 2, 3 → P06: –5.0 to +150.0 °C
Max. flow temperature	70.0 °C	PA1, 2, 3 → P07: 5.0 to 150.0 °C
Base point for return temperature	65.0 °C	PA1, 2, 3 → P13: 5.0 to 90.0 °C

Note

- *The limiting factors 'K_P' of the return sensor functions (CO1, 2, 3 → F03) apply during cooling control as well.*
- *The request for a signal by downstream control circuits or externally (when a pre-control circuit is used) is based on the maximum selection.*
  Therefore, systems (e.g. system 5.0) or heating controllers connected over a device bus are not suitable for transmitting the signal for required cooling.
- *The 'Set point boost (pre-control circuit)' parameter can only generate higher and not lower set points in the pre-control circuit.*

16.2.13 Differential temperature control

In systems 1.0 and 16.0, the differential temperature control causes the delivery rate of pump UP1 to be adapted depending on the difference between the secondary flow temperature and the secondary return temperature.

In system 1.0, the sensor input RüF2 is automatically activated for this purpose with the CO1 → F23 - 1 setting. In system 16.0, the sensor inputs VF2 and RüF2 are automatically activated. The influence factor K_P determines how strongly the heating controller responds when the temperature deviates from the set point of the differential temperature control.

The output AA1 is used for the differential temperature control. It is also possible to assign the analog output AA2, AA3 or AA4 instead. A PWM signal or a 0 to 10 V signal can be configured, which can also be reversed, if required.

Function	Default	Configuration
Differential temperature control	0	CO1 → F23 - 1
	20.0 °C	Set point of differential temperature control: 0.0 to 50.0 °C
	1.0	Influence factor K_P: 0.1 to 10.0
	20 %	Minimum speed: 0 to 100 %
AA1, AA2, AA3, AA4 reverse	0	CO5 → F25, F26, F27, F28 - 1
	0 %	Zero: 0 to 50 %
AA1, AA2, AA3, AA4 PWM	0	CO5 → F34, F35, F36, F37 - 1

16.3 Functions of the DHW circuit

16.3.1 DHW heating in the storage tank system

Start storage tank charging

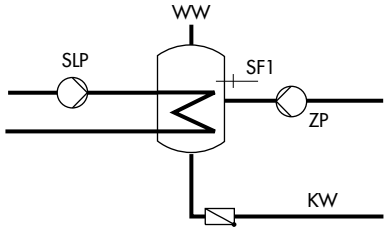

SLP	Storage tank charging pump
SF1	Storage tank sensor
ZP	Circulation pump (DHW)
WW	Hot water
KW	Cold water

Fig. 17: *Schematics of a storage tank system*

The heating controller begins charging the storage tank when the water temperature measured at storage tank sensor SF1 falls below the 'DHW temperature set point' by 0.1 °C. If the flow temperature in the system exceeds the desired charging temperature, the heating controller tries to reduce the flow temperature in the heating circuit for up to three minutes before the storage tank charging pump is activated. When there is no heating operation or when the flow temperature in the system is lower, the storage tank charging pump is directly switched on.

If CO4 → F15 - 1 (**SLP ON depending on return temperature**) is configured, the primary valve is opened without simultaneously operating the storage tank charging pump. The storage tank charging pump is first switched on when the primary return temperature has reached the temperature currently measured at storage tank sensor SF1. This function enables storage tank charging when the heating system is switched off, e.g. in summer mode, without cooling down the storage tank first by filling it with cold flow water. The storage tank charging pump does not start operation before a sufficiently high temperature has been reached at the heat exchanger.

An activated discharging protection function (CO4 → F27 - 1) causes the charging to be stopped when the charging temperature does not reach its set point even though the valve is fully open or it falls below the temperature measured at SF1 and does not rise again.

Charging with the valve fully open is stopped after one hour at the latest.

In such cases, 'Operation: discharging protection' is displayed with the measured values in the DHW circuit for the next 30 minutes.

---

i *Note*

The 'DHW temperature set point' is to be regarded in relation to the charging temperature if a storage tank thermostat is used.

Time-controlled switchover of storage tank sensors

By configuring a second storage tank sensor SF2 (CO4 → F19 - 1), it is possible to determine that the storage tank sensor SF1 is used for day mode in the DHW circuit and storage tank sensor SF2 for night mode.

As a result, different storage tank volumes can be kept at a constant temperature according to a time schedule and also at different temperatures if the 'DHW temperature set points' for day and night differ from one another.

Stop storage tank charging

The heating controller stops charging the storage tank when the water temperature measured at storage tank sensor SF1 has reached the temperature T = 'DHW temperature' + 'Hysteresis'. When there is no heating operation or when the flow temperature demand in the system is lower, the corresponding valve is

closed. The storage tank charging pump is switched off after t = 'Lag time of storage tank charging pump' x 'Valve transit time'.

With the default settings, the temperature in the storage tank is increased by 5 °C to reach 65 °C when the storage tank temperature falls below 60 °C. The charging temperature is calculated from the DHW temperature (60 °C) +'Charging temperature boost' (10 °C), which equals 70 °C.

Once the storage tank has been charged, the heating valve is closed and the charging pump continues to run for the time t = P06 x Valve transit time. Outside the times-of-use, the storage tank is only charged when the temperature falls below 40 °C ('Night set point for DHW temperature'). In this case, the tank is charged with a charging temperature of 50 °C until 45 °C is reached in the tank.

In this case, the tank is charged with a charging temperature of 50 °C until 45 °C is reached in the tank.

Function	Default	Configuration
Storage tank sensor SF1	1	CO4 → F01 - 1
Storage tank sensor SF2	0	CO4 → F02 (- 1 when CO4 → F019 - 1)
SLP depending on return temperature	0	CO4 → F015 - 1
Switchover	0	CO4 → F19 (-1 only when CO4 → F02 - 1)
Discharging protection	0	CO4 → F27 - 1
ZP on/off cycle mode	0	CO4 → F30 - 1 ON time: 2 to 30 min OFF time: 2 to 30 min

Parameters	Default	Switch position: value range
Day set point for 'DHW temperature' and charging temperature with CO4 → F01 - 0 setting	60.0 °C	🌡☼ Min. to max. adjustable DHW set point
Night set point for DHW temperature	40.0 °C	🌡☾ Min. to max. adjustable DHW set point

Parameters	Default	Parameter level: value range
Min. adjustable DHW set point [1]	40.0 °C	PA4 → P01: 5.0 to 90.0 °C
Max. adjustable DHW set point [1]	60.0 °C	PA4 → P02: 5.0 to 90.0 °C
Hysteresis [2]	5.0 °C	PA4 → P03: 0.0 to 30.0 °C
Charging temperature boost [3]	10.0 °C	PA4 → P04: 1.0 to 50.0 °C
Lag time for storage tank charging pump	1.0 °C	PA4 → P19 x valve transit time T_Y: 0.0 to 10.0

1) Parameters serve as limitation of the adjustment range for the DHW temperature to be set at the rotary switch

2) Deactivation value T = DHW temperature + 'Hysteresis'

3) Charging temperature T = DHW temperature + 'Charging temperature boost'

16.3.1.1 DHW circuit additionally controlled by a globe valve

In systems 7.1, 8.1, 9.1, 9.5, 11.1, 12.1, 13.1 and 21.1, the following versions with globe valve can be configured instead of the three-way valve control in the DHW circuit:

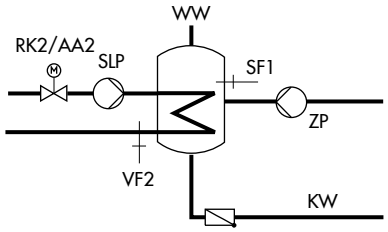

Fig. 18: *Schematics of a storage tank system with a globe valve for return temperature limitation*

RK2/AA2	Control circuit/valve 2
SLP	Storage tank charging pump
SF1	Storage tank sensor
VF2	Flow sensor
ZP	Circulation pump (DHW)
WW	Hot water
KW	Cold water

Globe valve and flow sensor VF2 are used exclusively for return temperature limitation in the schematics shown above. The pre-control circuit provides at least the same flow temperature as in the standard hydraulic schematic version, which is calculated from 'DHW temperature set point' + 'Charging temperature boost' + 'Boost set point of pre-control circuit'.

The functions and parameters of the **DHW heating in the storage tank system** are upgraded by the following settings:

Function	Default	Configuration
Return control	0	CO4 → F20 - 1

Parameters	Default	Parameter level: value range
Max. return temperature	65.0 °C	PA4 → P07: 20.0 to 90.0 °C

16.3.2 DHW heating in the storage tank charging system

Start storage tank charging

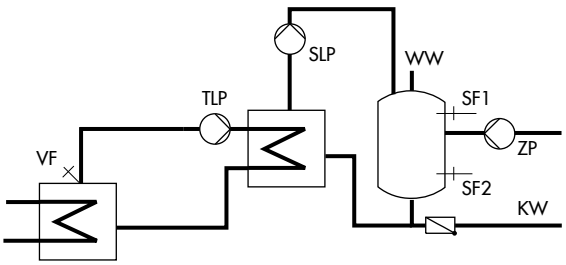

Fig. 19: *Schematics of a storage tank charging system*

TLP	Heat exchanger charging pump
VF	Flow sensor
SLP	Storage tank charging pump
SF1	Storage tank sensor
SF2	Storage tank sensor
ZP	Circulation pump (DHW)
WW	Hot water
KW	Cold water

The heating controller begins charging the storage tank when the water temperature measured at storage tank sensor SF1 falls below the 'DHW temperature set point' by 0.1 °C. If the flow temperature in the system exceeds the desired charging temperature, the heating controller tries to reduce the flow temperature in the heating circuit for up to three minutes before the heat exchanger charging pump together with the storage tank charging pump is activated.

When there is no heating operation or when the flow temperature in the system is lower, the heat exchanger charging pump is directly switched on. If the temperature currently measured at storage tank sensor 1 is reached at the flow sensor VF, the storage tank charging pump is switched on.

The CO4 → F27 - 1 setting to activate the discharging protection function causes the charging to be stopped when the charging temperature does not reach its set point even though the valve is fully open or it falls below the temperature measured at SF1 and does not rise again.

Charging with the valve fully open is stopped after one hour at the latest.

In such cases, 'Operation: discharging protection' is displayed with the measured values in the DHW circuit for the next 30 minutes.

If a storage tank thermostat is used, the storage tank charging pump is switched on when the temperature T = Charging temperature – 5 °C is reached at the flow sensor VF.

i ***Note***

The 'DHW temperature set point' is to be regarded in relation to the charging temperature if a storage tank thermostat is used.

When the flow sensor VF4 is activated, the set point in the heat exchanger circuit is influenced by the system deviation in the storage tank charging circuit upon activation of the storage tank charging pump: if the temperature measured at flow sensor VF4 is lower than the 'Charging temperature', the set point in the heat exchanger circuit is increased in steps of 1 °C.

When the set point in the heat exchanger charging circuit reaches the 'Max. charging temperature', the set point is no longer increased.

'Max. charging temp.' error message is generated.

i ***Note***

The set point in the heat exchanger circuit which is valid at the end of the charging cycle will be used again at the beginning of the next cycle.

If times-of-use have been programmed for DHW heating, the 'DHW temperature set point' adjusted at the rotary switch is applied during these times-of-use. Outside the times-of-use, the night set point for DHW temperature is used.

This function does not apply when a storage tank thermostat is used.

Time-controlled switchover of storage tank sensors

By configuring a second storage tank sensor SF2 (CO4 → F19 - 1), it is possible to determine that the storage tank sensor SF1 is used for day mode in the DHW circuit and storage tank sensor SF2 for night mode.

As a result, different storage tank volumes can be kept at a constant temperature according to a time schedule and also at different temperatures if the 'DHW temperature set points' for day and night differ from one another.

Stop storage tank charging

The heating controller stops charging the storage tank when the water temperature measured at storage tank sensor SF2 has reached the temperature T = 'DHW temperature' + 'Hysteresis'. To do so, the heat exchanger charging pump is immediately switched off.

When there is no heating operation or when the flow temperature demand in the system is lower, the corresponding valve is closed.

The storage tank charging pump is switched off after the time has elapsed t = P06 x valve transit time.

Function	Default	Configuration
Storage tank sensor SF1		CO4 → F01 - 1
Storage tank sensor SF2		CO4 → F02 - 1
Flow sensor VF	0	CO4 → F05
Switchover	0	CO4 → F19
Discharging protection	0	CO4 → F27 - 1
ZP on/off cycle mode	0	CO4 → F30 - 1 ON time: 2 to 30 min OFF time: 2 to 30 min

Parameters	Default	Parameter level: configuration
Day set point for 'DHW temperature' and charging temperature with CO4 → F01 - 0 setting	60.0 °C	Min. to max. adjustable DHW set point
Night set point for DHW temperature	40.0 °C	Min. to max. adjustable DHW set point
DHW temperature sustaining value	40.0 °C	Min. to max. DHW temperature

Parameters	Default	Parameter level: value range
Min. adjustable DHW set point [1]	40.0 °C	PA4 → P01: 5.0 to 90.0 °C
Max. adjustable DHW set point [1]	60.0 °C	PA4 → P02: 5.0 to 90.0 °C
Hysteresis [2]	5.0 °C	PA4 → P03: 1.0 to 30.0 °C
Charging temperature boost [3]	10.0 °C	PA4 → P04: 0.0 to 50.0 °C
Max. charging temperature	80.0 °C	PA4 → P05: 20.0 to 150.0 °C (only with VF4)
Lag time for storage tank charging pump	1.0	PA4 → P06: 0.0 to 10.0

1) Parameters serve as limitation of the adjustment range for the DHW temperature to be set at the rotary switch.

2) Deactivation value T = DHW temperature + 'Hysteresis'

3) Charging temperature T = DHW temperature + 'Charging temperature boost'

16.3.2.1 Cold charging protection

In system 1.1(-1), the **Cold charging protection** function prevents a storage tank charging from starting until the primary flow temperature is sufficiently high enough. The CO4 → F22 - 1 setting automatically activates the FG2 input to measure the primary flow temperature. If the measured primary flow temperature is lower than the measured storage tank temperature (e.g. due to a supply line that has cooled down at the start of a storage tank charging), the heating circuit valve is moved to the adjusted position at first. The storage tank charging is not released in absolute priority operation until the primary flow temperature has risen enough as a result. Parallel operation must be additionally configured if it is required.

Function	Default	Configuration
Cold charging protection	0	CO4 → F22 - 1
	10 %	Valve position: 1 to 100 %
Parallel pump operation	0	CO4 → F06 - 1
	10 min	Stop: 0 to 10 min
	40.0 °C	Temperature limit: 20.0 to 90.0 °C

16.3.3 DHW heating in instantaneous heating system

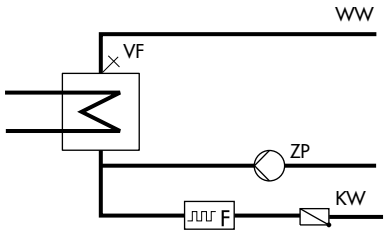

VF	Flow sensor
ZP	Circulation pump (DHW)
WW	Hot water
KW	Cold water
F	Water flow sensor

Fig. 20: *Schematics of an instantaneous heating system*

When the rate of hot water being tapped is not being measured, the control of the required 'DHW temperature' at the flow sensor VF is only active during times-of-use of the circulation pump ZP. To measure the rate of hot water being tapped, the CO4 → F04 - 1 can be used to activate either a flow switch, a water flow sensor (1400-9246) or a vortex flow sensor.

A vortex flow sensor can be powered over the analog output ('5 V supply' function) provided its maximum load at the analog output concerned is 20 mA and the total load of all outputs is not greater than 40 mA.

A flow switch allows the control of the DHW temperature to be activated outside the times-of-use of the circulation pump.

If the control with water flow sensor or vortex flow sensor is configured, the attenuation in the DHW circuit (CO4 → F13 - 1) is automatically activated and the temperature set to 8 °C. Measuring the rate of hot water being tapped significantly helps optimize the DHW temperature control. When a vortex flow sensor is used to measure the rate of hot water being tapped, enter the 'Lower range value' and 'Upper range value' for the measuring range settings based on the data provided in the data sheet of the vortex flow sensor. The expected rate of hot water that will actually be tapped is entered in the 'Processing start' and 'Processing end' parameters. If the vortex flow sensor is installed so that it not only measures the flow rate of the cold water but also the circulation flow rate, the 'Processing start' parameter must be used to exclude the measurement of the circulation flow rate. Otherwise, no synchronization can take place.

The 'Sync. valve = 0 min' setting causes the CLOSED position of the control valve to be synchronized after every tapping event. If several tapping events in quick succession are expected to occur in a system, it makes sense to enter long intervals between each synchronization.

The control of the required DHW temperature at the flow sensor VF is only active during times-of-use of the circulation pump ZP.

If a water flow sensor is connected (see Fig. 20), make sure that the function '10 V supply' is configured with the CO5 → F34, F35, F36 or F37 setting.

i *Note*

After entering the key number 1999, the status information, e.g. 'Operating point', 'Valve-controller' (influence of the PI component on the valve position) and 'Valve-sensor' (influence of the rate of hot water being tapped on the valve position), is displayed in the extended operating level as a percent after the sectional display of the DHW circuit when a water flow sensor or vortex flow sensor is used.

Function	Default	Configuration
Water flow sensor	0	CO4 → F04 - 1 Sensor: Binary = (flow switch at terminals 17/18) Analog (= water flow sensor 1400-9246) Sync. valve: 0 to 60 min (0 min) 0 to 10 V/2 to 10 V (= vortex flow sensor) 0 to 20 mA/4 to 20 mA (= vortex flow sensor; 50 Ω parallel to the analog input) When a vortex flow sensor is used: Analog input 1, 2, 3 (3) Lower range value: 0 to 10 V or 0 to 20 mA (adjustable in steps of 0.1) Lower range value: 0 to 250 l/min (adjustable in steps of 1 l/min) Upper range value: 0.1 to 10 V or 0.1 to 20 mA (adjustable in steps of 0.1) Upper range value: 0 to 250 l/min (adjustable in steps of 1 l/min) Processing start: 0 to 25 l/min (adjustable in steps of 0.1 l/min) Processing end: 0 to 250 l/min (adjustable in steps of 1 l/min) Select: Analog (water flow sensor), Binary (flow switch)
AA1, AA2, AA3, AA4 PWM	0	CO4 → F34, F35, F36, F37 - 1 Function: 10 V supply
ZP on/off cycle mode	0	CO4 → F30 - 1 ON time: 2 to 30 min OFF time: 2 to 30 min

Parameters	Default	Switch position: value range
Day set point for DHW temperature	60.0 °C	Min. to max. adjustable DHW set point
Night set point for DHW temperature	40.0 °C	Min. to max. adjustable DHW set point

Parameters	Default	Parameter level: value range
Min. adjustable DHW set point	40.0 °C	PA4 → P01: 5.0 to 90.0 °C
Max. adjustable DHW set point	60.0 °C	PA4 → P02: 5.0 to 90.0 °C

16.3.4 Domestic hot water with solar system

The systems 1.3, 1.4, 1.7, 1.8, 2.3, 2.4, 3.3, 3.4, 4.3, 10.3, 11.3 and 11.4 are fitted with a solar system for DHW heating.

In these systems, the difference between the temperatures measured at the storage tank sensor SF3 and the sensor VF3 at the solar collector is determined. The 'Solar circuit pump ON' parameter determines the minimum temperature difference between sensors VF3 and SF3 required to activate the solar circuit pump. If the temperature difference falls below the value of 'Solar circuit pump OFF', the solar circuit pump is switched off. Basically, the solar circuit pump is also switched off when either the water temperature measured at storage tank sensor SF3 has reached the 'Max. storage tank temperature' or when the solar collector temperature rises above 120 °C.

i ***Note***

The times-of-use of the DHW circuit do not affect the operation of the solar system.

After the key number 1999 has been entered, the operating hours of the solar pump are displayed in extended operating level (see Chapter 8).

Parameters	Default	Parameter level: value range
Solar circuit pump ON	10.0 °C	PA4 → P10: 1.0 to 30.0 °C
Solar circuit pump OFF	3.0 °C	PA4 → P11: 0.0 to 30.0 °C
Max. storage tank temperature	80.0 °C	PA4 → P12: 20.0 to 90.0 °C

16.3.5 Intermediate heating

This function can only be activated in systems 2.x, 4.1 to 4.5, 6.1, 8.x, 9.5 and 9.6.

The CO4 → F07 - 1 setting causes the heating operation of the UP1 heating circuit to start again for a period of ten minutes after 20 minutes of priority operation (heating deactivated during DHW heating). The CO4 → F07 - 0 setting is used to give storage tank charging unlimited priority over the heating operation in the UP1 heating circuit.

Function	Default	Configuration
Intermediate heating	1	CO4 → F07 - 1

16.3.6 Parallel pump operation

This function can only be activated in systems 1.1-1, 2.x, 4.1 to 4.5, 6.1, 8.x, 9.5 and 9.6.

When CO4 → F06 - 1 is configured, the circulation pump UP1 remains activated during DHW heating.

This does not include operating situations during which the current flow temperature demand of the pump circuit is lower than the adjusted 'Temperature limit'. In this case, the controller applies priority operation, if necessary with intermediate heating. Once a parallel pump operation cycle has been activated and the time period set in 'Stop' has elapsed, system deviations greater than 5 °C cause the controller to suspend parallel operation for ten minutes and to apply priority operation.

'Stop' = 0 min leads to parallel operation once initiated to continue running, regardless of a system deviation.

'Stop parallel pump operation in the event of a system deviation' = 0 min leads to a parallel operation once initiated to continue running, regardless of a system deviation.

Function	Default	Configuration
Parallel pump operation	0	CO4 → F06 - 1
	10 min	Stop: 0 to 10 min
	40.0 °C	Temperature limit: 20.0 to 90.0 °C

16.3.7 Circulation pump during storage tank charging

The CO4 → F11 - 1 setting causes the circulation pump (DHW) to continue operating according to the programmed time schedule even during storage tank charging. By configuring CO4 →-> F11 - 0, the circulation pump is switched off as soon as the storage tank charging pump is activated. The circulation pump starts to operate again according to the time schedule when the storage tank charging pump has been switched off again.

Function	Default	Configuration
Circulation pump operation during storage tank charging	0	CO4 → F11

16.3.8 Priority circuit

The thermal power for DHW must be taken from the heating in cases when the assigned flow rate is insufficient to cover simultaneous operation of both DHW and heating. The priority function 'Stand-by mode' interrupts the heating operation. The priority functions 'Reverse control' and 'Set-back operation' reduce the thermal power for heating operation.

16.3.8.1 Reverse control

In all systems with DHW heating and at least one heating circuit with a control valve, DHW heating can be given priority by applying reverse control. The CO4 → F08 - 1 setting causes the temperature to be monitored at sensor VFx.

In systems without sensor VFx in the DHW circuit, the temperature is monitored directly at storage tank sensor SF1. If system deviations still occur after the time set in 'Start' has elapsed, the set point of the heating circuit with the control valve is gradually reduced each minute until the flow temperature set point has reached 5 °C at the minimum. How strongly the heating controller responds is determined by K_P.

The 'Start' setting = 0 causes the flow temperature set points of the corresponding heating circuits to be immediately reduced to 5 °C. As soon as more thermal power is available than required by the DHW, the flow temperature set points of the heating circuits are raised again.

Examples of systems without sensor VFx in the DHW circuit:

System 4.5, 11.0, 12.0, 13.0 and 21.0

Function	Default	Configuration
Priority (reverse)	0	CO4 → F08 - 1
	2 min	Start: 0 to 10 min
	1.0	K_P (influence factor): 0.1 to 10.0
		Control circuit: HC1, HC2, HC3, HC1+HC2, HC1+HC3
		Control circuit: HC1, HC2, HC3, HC1+HC2, HC1+HC3
Priority (set-back)	0	CO4 → F09 - 0
Priority (stand-by)	0	CO4 → F31 - 0

16.3.8.2 Set-back operation

In all systems with DHW heating (except for systems with instantaneous heating system and DHW temperature directly controlled at the storage tank sensor SF1) and at least one heating circuit with a control valve, DHW heating can be given priority by applying set-back operation. The CO4 → F09 - 1 setting causes the temperature to be monitored at sensor VFx in the DHW circuit.

If system deviations still occur after the time entered in 'Start' has elapsed, the selected heating circuits with the control valve are set to reduced operation. The 'Start' setting = 0 causes it to be implemented immediately. As soon as more thermal power is available than required by the DHW, reduced operation is deactivated again.

Function	Default	Configuration
Priority (reverse)	0	CO4 → F08 - 0
Priority (set-back)	0	CO4 → F09 - 1
Priority (stand-by)	0	CO4 → F31 - 0
	2 min	Start: 0 to 10 min
		Control circuit: HC1, HC2, HC3, HC1+HC2, HC1+HC3

16.3.8.3 Stand-by mode

In all systems with DHW heating (except for systems with instantaneous heating system and DHW temperature directly controlled at the storage tank sensor SF1) and at least one heating circuit with a control valve, DHW heating can be given priority by applying stand-by mode. The CO4 → F31 - 1 setting causes the temperature to be monitored at sensor VFx in the DHW circuit.

If system deviations still occur after the time entered in 'Start' has elapsed, the selected heating circuits with the control valve are set to stand-by mode. The 'Start' setting = 0 causes it to be implemented immediately until the demand for hot water has ended.

Function	Default	Configuration
Priority (reverse)	0	CO4 → F08 - 0
Priority (set-back)	0	CO4 → F09 - 0
Priority (stand-by)	0	CO4 → F31 - 1
	2 min	Start: 0 to 10 min
		Control circuit: HC1, HC2, HC3, HC1+HC2, HC1+HC3

16.3.9 Forced charging of DHW storage tank

To provide the full network performance for room heating when the time-of-use of the heating circuits begins, any storage tanks are charged one hour before the time-of-use of the heating circuits starts. For the individual heating controller, this means that storage tank charging is activated when the water temperature in the storage tank falls below the adjusted deactivation value of T = 'DHW temperature' + 'Hysteresis'.

To perform the force charging, the time-of-use for DHW must be interrupted for at least 15 minutes when the time-of-use for the heating circuit(s) starts.

i *Note*

This function is not available when a storage tank thermostat is used.

16.3.10 Thermal disinfection of DHW storage tank

In all systems with DHW heating, a thermal disinfection is performed on a selected day of the week or daily.

- In systems with DHW storage tank, it is heated to the adjusted 'Disinfection temperature', taking into account the 'Charging temperature boost' parameter (or 'Set point boost', depending on the system). Disinfection takes place within the adjusted time period ('Time').
- In systems with DHW heating in instantaneous heating system, the function remains active taking into account the Boost parameter until the circulation pipe, measured at storage tank sensor SF1, has reached the adjusted Disinfection temperature, provided disinfection has not been terminated prematurely at the end of the adjusted time period (Time).
- In systems with storage tank charging system, the CO4 → F24 - 1 setting can be used to activate the sensor RüF2 instead of SF1 or SF2 to switch off the thermal disinfection.

The 'Duration' determines how long the disinfection temperature must be maintained within the adjusted time period to rate the process successful. If 'Duration' is set to ≠ 0, no intermediate heating operation takes place during thermal disinfection.

When the 'Disinfection temperature' has not been reached before the end of the thermal disinfection cycle, it is indicated correspondingly on the display. This error message can also be generated prematurely if the remaining time until the disinfection temperature is reached is shorter than the adjusted 'Duration'. The indication is automatically reset when the disinfection temperature is properly reached during the following thermal disinfection cycle.

Thermal disinfection for preventing legionella infection has the following effect:

- High return temperatures during the disinfection cycle (return temperature limitation suspended)
- High DHW temperatures after thermal disinfection has been concluded
- Possibly lime scale, which can have a negative effect on heat exchanger performance.

i *Note*

This function is not available when a storage tank thermostat is used.

The return temperature limitation in the primary control circuit is deactivated also while thermal disinfection is active in a secondary controller in controllers linked with each other over a device bus.

i *Note*

The forced operation of the circulation pump (DHW) starts while thermal disinfection is active.

Function	Default	Configuration
Storage tank sensor SF1	1	CO4 → F01 - 1
Thermal disinfection	0	CO4 → F14 - 1
Bottom sensor for thermal disinfection		
	Wednesday	Monday, Tuesday, ..., daily
	00:00	Start: adjustable as required in steps of 15 minutes
	04:00	End: adjustable as required in steps of 15 minutes
	70.0 °C	Disinfection temperature: 60.0 to 90.0 °C
	10.0 °C	Set point boost: 0.0 to 50.0 °C [1]
	0 min	Duration: 0 to 255 min
	ON	Active when binary input (BE) = ON, OFF (start of disinfection with BE17) [2]
Bottom sensor for thermal disinfection	0	CO4 → F24 - 1: only when CO4 → F14 - 1 Sensor RüF2 as switch-off sensor active

[1] Systems 1.9, 3.8, 3.9, 5.9, 11.0, 11.3, 11.5, 11.9, 12.0, 12.9, 13.0, 13.9, 17.x, 18.x, 20.0, 21.0 and 21.9 only

[2] BE17 only functions when the time is set to 00:00 - 00:00 h

16.4 System-wide functions

16.4.1 Automatic summer/standard time switchover

The time is automatically changed on the last Sunday in March at 2.00 h and on the last Sunday in October at 3.00 h.

Function	Default	Configuration
Summer time	1	CO5 → F08 - 1

i *Note*

The automatic summer/standard time switchover can also be programmed in the Time/date menu (see Chapter 6).

16.4.2 Frost protection

Frost protection measures are taken when the outdoor temperature falls below 'Limit'. The switching differential to cancel the frost protection measures is always 1 °C.

Restricted frost protection

Frost protection measures are taken only when all heating circuits in the system are in stand-by mode. The circulation pumps are automatically switched on and their flow temperature set points are adjusted to 10 °C. The circulation pump in the DHW circuit is automatically switched on only when the stand-by mode has been adjusted at the rotary switch in all heating circuits. Nevertheless, the storage tank is always recharged to 10 °C if the storage tank temperature falls below 5 °C.

Highest priority for frost protection

The heating circuit circulation pumps are always switched on automatically. The flow temperature set points of all heating circuits currently in stand-by mode are set to +10 °C. In the DHW circuit, the circulation pump is always activated. If the storage tank temperature falls below +5 °C, the storage tank is recharged to +10 °C.

Function	Default	Configuration
Frost protection		CO5 → F09 - 0: Restricted frost protection CO5 → F09 - 1: Highest priority for frost protection
	3.0 °C	Limit: –15.0 to 3.0 °C

i *Note*

Frost protection operation of a pump, a heating circuit or the DHW circuit is only active when the ❄ frost protection icon is displayed.

! *NOTICE*

Possible damage caused by frost.

In stand-by mode (⏻), the flow temperature set points of all heating circuits are set to +10 °C when the flow temperature falls below +5 °C. Control is deactivated again five minutes after the flow temperature reaches +10 °C. Frost protection monitoring does not take place when the cooling control is configured.

16.4.3 Forced pump operation

When the heating circuit pumps have not been activated for 24 hours, forced operation of the pumps is started between 12.02 h and 12.03 h. This is done to avoid that the pumps get stuck when they are not operated for long periods of time. In the DHW circuit, the circulation pump is operated between 12.04 h and 12.05 h, the other pumps between 12.05 h and 12.06 h.

16.4.4 Return temperature limitation

The temperature difference between the flow and return in a network indicates how well the energy is used: the greater the difference, the higher the efficiency. A return sensor is sufficient to evaluate the temperature difference when the flow temperatures are predefined. The return temperature can be limited either to a value depending on the outdoor temperature (variable) or to a fixed set point. When the temperature measured at return sensor RüF exceeds the current return temperature limit, the set point of the flow temperature (flow temperature of the heating system, charging temperature) is reduced. This causes the primary flow rate to be reduced and the return temperature to drop.

In the following systems, the 'Max. return temperature' parameter (PA4 level) is used for limitation in the primary circuit during DHW heating if it is greater than the parameter valid for the primary circuit:

System 2.x, 3.1 to 3.4, 4.1 to 4.4, 5.1, 5.2, 6.1, 7.x, 8.x and 9.x

The 'K_P (limiting factor)' determines how strongly the heating controller responds when the limit values are exceeded in either direction (PI algorithm).

If just the proportional component is to be implemented, configure CO5 → F16 - 1. This allows the integral-action component in the return temperature limitation algorithm of all control circuits of the heating controller to be deactivated. The set point reading (flow temperature of the heating, charging temperature) of the control circuit concerned blinks to indicate that a return temperature limitation is active.

i *Note*

When outdoor-temperature-compensated control with gradient characteristic is used, the return temperature is limited to a fixed value by equating the 'Base point for return temperature' and 'Max. return temperature' (PA1, 2, 3, 11, 12, 13 → P13 and P14) parameters.

Function	Default	Configuration
Return sensor RüF1/2/3		CO1, 2, 3, 4, 11, 12, 13 → F03 - 1
	1.0	K_P (limiting factor): 0.1 to 10.0
Return temperature limitation with P algorithm [1)]	0	CO5 → F16

1) If the heating controller indicates CO5 → F00 - 1, any access to the return, flow rate and power settings is locked.

Parameters	Default	Parameter level: value range
Return gradient	1.2	PA1, 2, 3, 11, 12, 13 → P11: 0.2 to 3.2
Return level	0.0 °C	PA1, 2, 3, 11, 12, 13 → P12: –30.0 to 30.0 °C
Base point for return temperature	65.0 °C	PA1, 2, 3, 11, 12, 13 → P13: 5.0 to 90.0 °C
Max. return temperature	65.0 °C	PA1, 2, 3, 11, 12, 13 → P14: 5.0 to 90.0 °C
	65.0 °C	PA4 → P07: 5.0 to 90.0 °C

or:

Parameters	Default	Parameter level: value range
Return temperature, points 1 to 4	65.0 °C	PA1, 2, 3, 11, 12, 13 → P05: 5.0 to 90.0 °C

i ***Note***

To ensure the entered return temperature limit can be kept, observe the following:

⇨ *Do not adjust the heating characteristic to ascend too steeply.*

⇨ *The speed of the circulation pumps is not set too high.*

⇨ *The heating systems have been balanced.*

16.4.5 Condensate accumulation control

⇨ Activate the **Damping** function to start up condensate accumulation plants, in particular to avoid problematic excess temperatures.

⇨ Activate the **Limitation of system deviation for OPEN signal** function to start up condensate accumulation plants, in particular to avoid problematic excess temperatures.

The heating controller response to set point deviations which cause the primary valve to open is attenuated. The heating controller response to set point deviations which cause the control valve to close remains unaffected.

i ***Note***

The Condensate accumulation control function can only be activated when the control circuit concerned is controlled using a PI algorithm (three-step control).

Function	Default	Configuration
Control mode	1	CO1, 2, 3, 4, 11, 12, 13 → F12 - 1
Damping	0	CO1, 2, 3, 4, 11, 12, 13 → F13 - 1
	3.0 °C	Max. system deviation: 3.0 to 10.0 °C

16.4.6 Three-step control

The flow temperature can be controlled using a PI algorithm. The valve reacts to pulses that the heating controller sends when a system deviation occurs. The length of the first pulse, in particular, depends on the extent of the system deviation and the selected 'K_P (gain)' (the pulse length increases as K_P increases). The pulse and pause lengths change continuously until the system deviation has been eliminated.

The pause length between the single pulses is greatly influenced by 'Reset time T_n' (the pause length increases as T_n increases). The 'Valve transit time T_Y' specifies the time required by the valve to travel through the range of 0 to 100 %.

Function	Default	Configuration
Control mode	1	CO1, 2, 3, 4, 11, 12, 13 → F12 - 1
	2.0	K_P (gain): 0.1 to 50.0
	120 s	T_n (reset time): 1 to 999 s
	0 s	T_V (derivative-action time): **Do not change the value**.
	35 s	T_Y (valve transit time): 15, ..., 240 s

16.4.7 On/off control

The flow temperature can be controlled, for example by activating and deactivating a boiler. The heating controller switches on the boiler when the flow temperature falls below the set point by T = 0.5 x 'Hysteresis'. When the set point is exceeded by T = 0.5 x 'Hysteresis', the boiler is switched off again. The greater the value for 'Hysteresis', the less frequent switching on and off will be. By entering the 'Minimum ON time', an activated boiler remains switched on during this period regardless of the flow temperature fluctuations. Similarly, a deactivated boiler remains switched off regardless of the flow temperature fluctuations if the 'Min. OFF time' has been specified.

Function	Default	Configuration
Control mode	1	CO1, 2, 3, 4, 11, 12, 13 → F12 - 0
	5.0 °C	Hysteresis: 1.0 to 30.0 °C
	2 min	Min. ON time: 0 to 10 min
	2 min	Min. OFF time: 0 to 10 min

16.4.8 Continuous control

The flow temperature can be controlled using a PID algorithm. The valve receives an analog 0 to 10 V signal from the heating controller. When a system deviation occurs, 'Gain K_P' immediately causes the 0 to 10 V signal to change (the greater the K_P, the greater the change). The integral component becomes effective with time: 'Reset time T_n' represents the time which elapses until the integral component has changed the output signal to the same extent as the immediate change performed by the proportional component (the greater T_n is, the slower the rate of change will be). Due to the derivative component, any change of the system deviation is incorporated into the output signal with a certain gain (the greater the derivative-action time T_V is, the stronger the change will be).

Function	Default	Configuration
Control mode	1	CO1, 2, 3, 11, 12, 13 → F12 - 1
	2.0	K_P (gain): 0.1 to 50.0
	120 s	T_n (reset time): 1 to 999 s
	0 s	T_V (derivative-action time): 0 to 999 s
	35 s	T_Y (valve transit time): 15, 20, 25, ..., 240 s

16.4.9 Releasing a control circuit/heating controller with binary input

The release of an individual control circuit or the heating controller with the binary input only becomes effective when the respective control circuit is in automatic mode (⏲ icon). The released control circuit always works in automatic mode; the deactivated control circuit behaves as if it were transferred to stand-by mode. It remains active, however, in any case for processing an external demand. The control circuit can be released over the binary input when the binary input is either a make contact ('Active when binary input (BE)' = OFF) or a break contact ('when binary input (BE)' = ON).

i ***Note***

- *In systems with downstream heating circuit without a valve (systems 2.x, 4.x), the binary input BE1 only influences the operation of this heating circuit when 'Release control circuit' is configured, whereas the operation of the entire heating controller (including the control circuits of the connected TROVIS I/O expansion modules; excluding the processing of external demand) is influenced when 'Release controller' is configured.*
- *In system 3.0, the binary input BE15 influences the operation of the entire heating controller (except for processing an external demand) when 'Release control circuit' is configured.*
- *In buffer tank systems 15.x and 16.x, the binary input BE15 influences only the operation of the buffer tank charging circuit when 'Release control circuit' is configured.*

Function	Default	Configuration
Release	0	CO1, 2, 3 → F14 - 1
Release controller	0	CO5 → F15 - 1

1) Active when BI = ON, OFF

16.4.10 Speed control of the charging pump

This function allows the delivery rate of the charging pump in systems with buffer tank (CO1 → F21 - 1) and in systems with DHW storage tank (CO4 → F21 - 1) to be varied based on the temperature. When this function is activated, the input SF2 is automatically activated. In combination with the CO1 → F06 - 0 or CO4 → F02 - 0 setting, this input is only used for speed control and not to stop the storage tank charging.

If CO1 → F26 - 1 or CO4 → F26 - 1 is also configured, another sensor can be determined for speed control in these function blocks. 'RüF2' is set by default as the function block parameter. Sensors in the selection list that are already assigned to a function and would consequently be used twice as a result are marked by an exclamation mark in front of the sensor designation. The sensor assigned in F26 - 1 is designated as 'SLP sensor' in the operating level.

The speed signal is issued at output AA1. It is also possible to assign the analog output AA2, AA3 or AA4 instead. A PWM signal or a 0 to 10 V signal can be configured, which can also be reversed, if required.

All storage tank charging actions start with the minimum delivery rate of the charging pumps. As soon as the charging temperature is nearly reached, the delivery rate of the charging pump is increased and the valve controls the flow rate. This occurs until the maximum delivery rate setting is reached. If the charging temperature drops 5 °C below its associated set point, the delivery rate is reduced again.

At the latest when the temperature at the sensor for speed control has reached the 'Start' value to reduce the delivery rate, the linear reduction of the delivery rate based on the temperature at the sensor for speed control starts. If the temperature at the sensor for speed control reaches the 'Stop' value to reduce the delivery rate, the charging pump runs again at the minimum delivery rate. Following the lag time, the charging pump is deactivated when the storage tank is fully charged.

Function	Default	Configuration
Speed control of the charging pump	0	CO1 → F21 - 1 or CO4 → F21 - 1
	40.0 °C	Start speed reduction - SF2 limit: 5.0 to 90.0 °C
	50.0 °C	Stop speed reduction, limit: 5.0 to 90.0 °C
	20 %	Minimum speed: 0 to 50 %
	100 %	Maximum speed: 0 to 100 %
SLP temperature sensor	0	CO1 → F26 - 1 or CO4 → F26 - 1
	RüF2	Sensor: AF1 to SF3
AA1, AA2, AA3, AA4 reverse	0	CO5 → F25, F26, F27, F28 - 1
	0 %	Zero: 0 to 50 %
AA1, AA2, AA3, AA4 PWM	0	CO5 → F34, F35, F36, F37 - 1
		Function: SLP speed

16.4.11 Processing an external demand

The heating controller can process binary or analog requests for an externally required signal by a more complex secondary system.

A binary request can only be processed when the input SF3 or FG3 is not assigned. Processing of external demand by device bus can also be configured.

The 'Demand processing limit' parameter limits the flow temperature demand for control circuits RK1, RK2 or RK3, which is received over a 0 to 10 V signal or device bus.

❗ *NOTICE*

Risk of damage of the heating circuit through overheating.

Overheating may occur in the heating circuits of the primary controller without control valve.

Excessive charging temperatures in DHW circuits without control valve controlled by the primary controller are excluded when the default settings of the heating controller are used: while storage tank charging is active, no flow temperature higher than the charging temperature is used by the primary controller.

If the **Priority for external demand** function is activated, the external demand is also processed during storage tank charging.

The heating circuits can be configured in such a way that they only process external demand. The possible settings for each heating circuit do not apply with this configuration as only the external demand is processed with associated UP as feeder pump.

Function	Default	Configuration
Priority for external demand	0	CO4 → F16 - 1
Demand only	0	CO1 → F24 - 1
	0	CO2 → F24 - 1
	0	CO3 → F24 - 1

Parameters	Default	Parameter level: value range
Demand processing limit	0	PA1, 2, 3: 5.0 to 150 °C

Binary demand processing

Regardless of the operating mode set for the control circuit, except for manual mode, the controller regulates the flow temperature in the heating circuit concerned when either the binary input (terminals 17/18) is a make contact ('Active when BI' = OFF) or a break contact ('Active when BI' = ON) in control circuit HC1

to at least the adjusted flow temperature adjusted in PA1 → P10 ('Minimum flow temperature set point HC for binary demand processing').

Function	Default	Configuration
Demand processing, 0 to 10 V	0	CO1, 2, 3 → F16 - 0
Binary demand processing	0	CO1 → F17 - 1
	ON	Active when binary input (BE) = ON, OFF

Parameters	Default	Parameter level: value range
Minimum flow temperature set point HC for binary demand processing	40.0 °C	PA1 → P10: 5.0 to 150.0 °C

Demand processing, 0 to 10 V

Regardless of the operating mode set for the control circuit affected (except for pre-control circuit in stand-by and manual mode), the controller regulates the flow temperature at least to the temperature corresponding with the 0 to 10 V signal at the assigned 0 to 10 V input.

Several 0 to 10 V inputs can be assigned to a control circuit. Alternatively, one 0 to 10 V input can have an effect on more than one control circuit. The function block parameters 'Lower transmission range' and 'Upper transmission range' can be set for each 0 to 10 V input separately in CO5 → F31 - 0 to CO5 → F33 - 0 to define the 0 to 10 V signal to represent the corresponding temperature demand at the various 0 to 10 V inputs. If an input is to become active at a certain voltage signal level, the zero shift must also be activated in the corresponding function block and the percent of zero determined. For example, a demand for a flow temperature of 40 to 90 °C to be processed at the analog input AE1 using a 2 to 10 V signal requires the following settings: CO5 → F31 - 1, 'Zero' = 20 %, 'Lower transmission range' = 40 °C and 'Upper transmission range' = 90 °C.

When the processing of external demand using a 0 to 10 V signal is activated, the demanded flow temperatures over the individual analog inputs are displayed after confirming the system scheme.

Function	Default	Configuration
Demand processing, 0 to 10 V	0	CO1 → F16 - 1
	3	Analog input 1, 2, 1+2, 3, 1+3, 2+3, 1+2+3
	0	CO2 → F16 - 1
	2	Analog input 1, 2, 1+2, 3, 1+3, 2+3, 1+2+3
	0	CO3 → F16 - 1
	1	Analog input 1, 2, 1+2, 3, 1+3, 2+3, 1+2+3
Binary demand processing	0	CO1 → F17 - 0
AE1 zero shift	0	CO5 → F31 - 1
	5 %	Zero: 5 to 20 %
	0 °C	Lower transmission range: 0 to 150 °C
	120 °C	Upper transmission range: 0 to 150 °C
AE2 zero shift	0	CO5 → F32 - 1
	5 %	Zero: 5 to 20 %
	0 °C	Lower transmission range: 0 to 150 °C
	120 °C	Upper transmission range: 0 to 150 °C
AE3 zero shift	0	CO5 → F33 - 1
	5 %	Zero: 5 to 20 %
	0 °C	Lower transmission range: 0 to 150 °C
	120 °C	Upper transmission range: 0 to 150 °C

Parameters	Default	Parameter level: value range
Set point boost (pre-control circuit)	5,0 °C	PA1, 2 or 3 → P15: 0.0 to 50.0 °C

16.4.12 External demand using a 0 to 10 V signal

The heating controller can request a demand for the maximum flow set point (with boost, if need be) by issuing an analog 0 to 10 V signal for external demand.

The output AA1 is used in this case. It is also possible to assign the analog output AA2, AA3 or AA4 instead.

Analog, binary signals or requests processed over the device bus are integrated into the analog request for an external demand.

Function	Default	Configuration
External demand	0	CO1 → F18 - 1
	0.0 °C	Lower range value: 0.0 to 150.0 °C
	120.0 °C	Upper range value: 0.0 to 150.0 °C
	0.0 °C	Boost: 0.0 to 30.0 °C
AA1, AA2, AA3, AA4 PWM	0	CO5 → F34, F35, F36, F37 - 0 Function: External demand

16.4.13 Power limitation in RK1

The power can be limited based on a pulse signal up to 800 pulse/h at terminals 17/18. This only applies to systems which do not use input SF3/FG3.

Three different operating situations exist:

- A system with simultaneous room and DHW heating requires maximum energy.
- A system with a fully charged storage tank that is only used for room heating requires less energy.
- A system that suspends room heating during DHW heating requires less energy.

As a result, three different maximum limit values can be adjusted:

- 'Max. limit' to determine the absolute upper limit
- 'Max. limit (heating)' to operate room heating only
- 'Max. limit (DHW)' to operate DHW heating only

In all systems without DHW heating or without heating circuit, only the max. limit for power can be specified. If the 'Max. limit' or 'Max. limit (heating)' parameter is set to 'OT', a four-point characteristic configured in CO1 → F11 - 1 allows the input of four power limits for outdoor-temperature-compensated power limitation in addition to the outdoor, flow and return temperature values.

All limits are adjusted as pulses per hour (pulses/h). As the reading for the current pulse rate P in pulse/h (see Chapter 8 concerning extended operating level, key number 1999) is calculated based on the time interval between incoming pulses, the heating controller naturally cannot react immediately to every sudden power change in the system. The flow set point of the control circuit RK1 is reduced when the pulse rate reaches the currently valid maximum limit. The 'Limiting factor' determines how strongly the controller responds.

Example to determine the limit:
If a thermal power of 30 kW is to be limited, the following limit must be set in a heat meter, which issues one pulse per kilowatt hour:

$$P = \frac{30\ \text{kW}}{1\ \text{kWh/pulse}} = 30\ \text{pulse/h}$$

i ***Note***

If the heating controller indicates CO5 → F00 - 1, any access to the return, flow rate and power settings is locked.

Function	Default	Configuration
Power limitation in RK1 [1]	0	CO5 → F10 - 1
	15 pulse/h	Max. limit: OT to 800 pulses/h
	15 pulse/h	Max. limit (heating) [2]: OT to 800 pulses/h
	15 pulse/h	Max. limit (DHW) [2]: 1 to 800 pulses/h
	1.0	Limiting factor: 0.1 to 10.0
Power limitation in RK1 by meter bus	0	CO6 → F12 - 0

1) Not system 1.9

2) Not systems 1.0, 1.5-1.8, 3.0, 3.5, 3.8, 3.9, 4.0, 5.9, 7.x, 10.x, 11.x, 12.x, 13.x, 14.x, 15.x, 16.x, 17.x, 18.x, 20.0, 21.x and 25.x

16.4.14 Creep feed rate limitation with a binary input

It is possible to report to the heating controller when the creep feed rate has fallen below a certain level by using a limit switch of the primary valve connected at the input BE13 or to RüF1. Either a break contact ('Active when BI =' OFF) or a make contact ('Active when BI =' ON) can be configured at the binary input BE13 to indicate that the creep feed rate has fallen below a certain level.

Only the binary input as make contact at RüF1 can be processed. Shortly after the alert, the heating controller closes the valve RK1. As soon as the flow temperature falls below the set point by more than 5 °C after the valve has been closed, control operation is started again.

Function	Default	Configuration
Creep feed rate limitation [1]	0	CO5 → F12 - 1
	Binary	Switching mode: Binary (terminals 13/19), Analog (RüF1)
	ON	Active when BI = ON, OFF

1) Not system 1.9

16.4.15 Device bus

The device bus allows the connection of up to 32 participants (Series 55xx Controllers). Terminals 29/30 are used in the TROVIS 5578-E Heating and District Heating Controller for this purpose.

No attention needs to be paid to the polarity of the device bus wiring.

A resistor with a resistance value of 200 Ω (±±10 %, 0.25 W) must be fitted as a bus termination on the last bus participant.

⇨ Activate the device bus for each device.

⇨ Assign a device bus address for each device.

Note that the device bus address 1 (ideally, the first bus participant in the system) is to be set for just one device in the system and that all device bus addresses must be unique. The heating controller with device bus address 1 implements the required bus bias voltage for the system. Once the controllers have been connected and set accordingly, additional functions can be configured. These partly application-specific functions include:

- Requesting and processing an external demand (see Chapter 16.4.15.1)
- Sending and receiving outdoor temperatures (see Chapter 16.4.15.2)
- Synchronizing the clock (see Chapter 16.4.15.3)
- Priority over all controllers (see Chapter 16.4.15.4)
- View error messages issued by the device bus (see Chapter 16.4.15.5)
- Activating TROVIS I/O expansion modules (see Chapter 16.4.16)

16.4.15.1 Requesting and processing an external demand

In general, the heating controller which controls the primary valve or boiler (= primary controller) in a system of linked controllers will process the demand of all subsequent controllers (= secondary controllers). As a result, the primary controller must be configured to receive this demand. Usually, the secondary controllers are configured such that they send their maximum flow set point to the primary controller.

In special cases, however, it might happen that only the set point of one control circuit is to be sent. The appropriate function blocks to do so are also available for selection. After the selected function blocks have been activated, you must specify a register number. The following applies: in a system of linked heating controllers which are hydraulically supplied by a primary controller, all heating controllers (primary and secondary controllers) must have the same register number setting for the 'Demand register'.

A heating controller which is configured to receive a demand in register no. 5 will not process a demand sent to register no. 6. The primary controller compares the received requested demands and its own requested demand and supplies the system with the required flow temperature (if necessary, increased by the 'Set point boost (pre-control circuit)'.

The 'Demand processing limit' parameter limits the flow temperature demand for control circuits RK1, RK2 or RK3 received over device bus.

i *Note*

Overheating may occur in the heating circuits of the primary controller without control valve.

The heating circuits can be configured in such a way that they only process external demand. The possible settings for each heating circuit do not apply with this configuration as only the external demand is processed with associated UP as feeder pump.

Primary controller:

Function	Default	Configuration
Device bus	0	CO7 → F01 - 1, device bus address
Receive external demand in RK1	0	CO7 → F15 - 1 [1]
Receive external demand in RK2	0	CO7 → F17 - 1 [1]
Receive external demand in RK3	0	CO7 → F18 - 1 [1]
Demand only	0	CO1 → F24 - 1
	0	CO2 → F24 - 1
	0	CO3 → F24 - 1
	5	

1) Register number: 5 to 64

Parameters	Default	Parameter level: value range
Set point boost (pre-control circuit)	5.0 °C	PA1, 2, 3 → P15: 0.0 to 50.0 °C
Demand processing limit	150.0 °C	PA1, 2, 3 → P21: 5.0 to 150.0 °C

Secondary controller:

Function	Default	Configuration
Device bus	0	CO7 → F01 - 1, device bus address
Send demand RK1	0	CO7 → F10 - 1 [1]
Send demand RK2	0	CO7 → F11 - 1 [1]
Send demand RK3	0	CO7 → F12 - 1 [1]
Send demand DHW	0	CO7 → F13 - 1 [1]
Send max. demand	0	CO7 → F14 - 1 [1]
	5	

1) Register number: 5 to 64

i *Note*

The register number specifies the location where the flow set points are saved in the primary controller. As a result, the register number set in the secondary controller in CO7 → F10 to F14 must be the same as the register number set in CO7 → F15 in the primary controller.

Excessive charging temperatures in DHW circuits without control valve controlled by the primary controller are excluded when the default settings of the heating controller are used: while storage tank charging is active, no flow temperature higher than the charging temperature is used by the primary controller. If the **Priority for external demand** function is activated, the external demand is also processed during storage tank charging.

Function	Default	Configuration
Priority for external demand	0	CO4 → F16 - 1

16.4.15.2 Sending and receiving outdoor temperatures

Heating controllers equipped with one or two outdoor sensor(s) can be configured to supply other heating controllers with the measured outdoor temperature(s) over the device bus. This enables outdoor-temperature-compensated control even in systems which do not have their own outdoor sensor.

Function	Default	Configuration
Device bus	0	CO7 → F01 - 1, device bus address
Send AF1	0	CO7 → F06 - 1 [1]
Receive AF1	0	CO7 → F07 - 1 [1]
Send AF2	0	CO7 → F08 - 1 [2]
Receive AF2	0	CO7 → F09 - 1 [2]
	1	
	2	

1) Default = 1: Register number 1 to 4
2) Default = 2: Register number 1 to 4

i ***Note***

The register number for the outdoor temperature AF1 or AF2 must be the same for the sending and the receiving controller.

16.4.15.3 Synchronizing the clock

One heating controller in a system of linked heating controllers must take on the **Clock synchronization** function. This heating controller sends its system time once every 24 hours to all other controllers over the device bus.

Regardless of this function, the system time of all controllers is adapted immediately when the time setting of one controller is changed.

Function	Default	Configuration
Device bus	0	CO7 → F01 - 1, device bus address
Clock synchronization	0	CO7 → F02 - 1

16.4.15.4 Priority over all controllers and return limitation

When heating controllers are linked with each other over a device bus, the heating circuits of other controllers can be shut down while DHW heating is active. It is also possible to configure the return temperature limitation in the primary circuit so that it is raised to the value adjusted for the maximum return temperature (or for point 1 of the return temperature in a four-point characteristic). Heating controllers configured to trigger this function must generate the 'DHW heating active' message. 'Receive release RK_' must be configured for the heating circuits concerned in the heating controllers whose heating circuit(s) are to be shut down when this DHW heating is active. The same register number must be specified if only one DHW circuit is to affect one or more heating circuits. If several DHW circuits exist in the system, it is possible to select the heating circuits that are only to react to one or other active DHW heating by assigning different register numbers. If a secondary heating circuit with valve is to be shut down, the valve of this circuit is closed while its circulation pump remains activated.

If a secondary heating circuit without valve is to be shut down, just its circulation pump (heating) and not the primary circuit (RK1) is shut down (for example in systems 2.x) by configuring 'Receive release RK1'.

Function	Default	Configuration
Device bus	0	CO7 → F01 - 1, device bus address
Send 'DHW heating active'	0	CO7 → F20 - 1 [1]
Raise return temperature	0	CO7 → F19 - 1 [1]
Receive release RK1	0	CO7 → F21 - 1 [1]
Receive release RK2	0	CO7 → F22 - 1 [1]
Receive release RK3	0	CO7 → F23 - 1 [1]
	32	

1) Register number/5 to 64

16.4.15.5 Viewing error messages issued by the device bus

The CO7 → F16 - 1 setting causes the heating controller to react to the error messages from the device bus by generating the 'External error' message as long as the errors of the other device bus participants exist.

Function	Default	Configuration
Receive errors	0	CO7 → F16 - 1

16.4.16 Activating TROVIS I/O expansion modules

The function blocks F31 to F33 allows one additional heating circuit to be added to a system. One TROVIS I/O expansion module is required per heating circuit. The CO7 → F31 - 1 setting activates the expansion module for heating circuit 11, CO7 → F32 - 1 activates the expansion module for heating circuit 12 and CO7 → F33 activates the expansion module for heating circuit 13 as well as all the associated levels and settings in the controller. Depending on which kind of communication is used, the additionally configured heating circuit works either in the primary circuit, i.e. parallel to the control circuit 1 of the configured main system, or linked to the control circuit 1 (HC1) of the configured main system. As a result, two new system schemes can be configured per TROVIS I/O module for each main system. Heating circuits connected to HC1 automatically send their flow temperature demand to HC1.

Function	Default	Configuration
Ext-HC11	0	CO7 → F31 - 1:
	11	TROVIS I/O for heating circuit 11 active
	To HC1	Device bus address: 11 to 19 connected/primary, to HC1
Ext-HC12	0	CO7 → F32 - 1:
	12	TROVIS I/O for heating circuit 12 active
	To HC1	Device bus address: 11 to 19 connected/primary, to HC1
Ext-HC13	0	CO7 → F33 - 1:
	13	TROVIS I/O for heating circuit 13 active
	To HC1	Device bus address: 11 to 19 connected/primary, to HC1

i *Note*

The default setting for the device bus address (33) must be changed in CO7 → F01 - 1 when extension modules are used (see Chapter 16.4.15).

16.4.17 Connecting potentiometers for valve position input

The FG1 to FG3 inputs can be used to connect potentiometers (e.g. to input valve positions) when a resistance room sensor is not configured in the control circuit concerned. The use of TROVIS 5570 Room Panel

is possible. The measured values in the ranges from 0 to 2000 Ω are displayed as measured value 13 (FG1), 14 (FG2) and 15 (FG3). They are also available as Modbus data points.

Function	Default	Configuration
Room sensor RF1, 2, 3	0	CO1, 2, 3 → F01 - 0 **Exceptions:** CO1 → F01 - 1 and CO7 → F03 - 1 CO2 → F01 - 1 and CO7 → F04 - 1 CO3 → F01 - 1 and CO7 → F05 - 1

16.4.18 Locking manual level

To protect the heating system, this function can be used to lock the manual level. When this function has been activated, automatic mode is started when the rotary switch is set to in automatic mode.

Function	Default	Configuration
Lock manual level	0	CO5 → F21 - 1

16.4.19 Locking the rotary switch

When this function has been activated, the heating controller remains in automatic mode regardless of the rotary switch position. The rotary switch can no longer be used to adjust the controller settings.

It is still possible to enter the key number.

Function	Default	Configuration
Lock rotary switch	0	CO5 → F22 - 1

16.4.20 Feeder pump operation

In the systems listed below, the feeder pump UP1 only starts to operate in the default setting when a flow temperature demand of a secondary controller exists:

System 3.0, 5.0, 7.x, 9.1, 9.2, 12.x, 15.1, 16.1, 16.5, 16.7 and 16.8

If CO5 → F14 - 1 is configured, this is also the case when the controller's own secondary circuit requires heat.

Function	Default	Configuration
Operation UP1	0	CO5 → F14 - 1

16.4.21 Speed control of the circulation pump (DHW)

The delivery rate of the circulation pump (DHW) can be controlled based on the circulation return temperature. The CO4 → F25 - 1 setting allows the output AA3 to be assigned for issuing the speed signal. It is also possible to assign the analog output AA1, AA2 or AA4 instead. A PWM signal or a 0 to 10 V signal can be configured, which can also be reversed, if required. The input RüF4/AF2 is used to measure the circulation return temperature.

Function	Default	Configuration
Speed control of circulation pump (DHW)	0	CO4 → F25 - 1
Return temperature of circulation pump (DHW) Target	55 °C	5 to 90 °C
K_P (gain)	1.0	0.1 to 50
T_n (reset time)	300 s	30 to 2000 s
Minimum speed	10 %	5 to 50 %
AA1, AA2, AA3, AA4 reverse	0	CO5 → F25, F26, F27, F28 - 1
AA1, AA2, AA3, AA4 PWM	0	CO5 → F34, F35, F36, F37 - 1 Function: ZP speed

16.4.22 On/off cycle mode of the circulation pump (ZP)

The CO4 → F30 - 1 setting allows an on/off cycle mode for the circulation pump (ZP) to be configured. The circulation pump (DHW) alternates between the times programmed in 'ON time' and 'OFF time' during the times-of-use of the circulation pump (DHW). 'CLK' instead 'OFF' is displayed while the 'OFF time' is active for the operation of the circulation pump (DHW).

Function	Default	Configuration
ZP on/off cycle mode	0	CO4 → F30 - 1
ON time	10 min	2 to 30 min
OFF time	10 min	2 to 30 min

16.4.23 External demand for heat due to insufficient heat supply

An external heat source can be demanded using the 0 to 10 V output. The CO1 → F18 - 1 function block for a request for external demand is automatically set. The function block parameters allow the transmission range to be determined. When a system deviation in RK1 greater than 10 °C lasts longer than 30 minutes, a voltage signal corresponding to the actual demand is generated. At the same time, the RK1 valve is forced to close.

After 30 minutes, the external demand for heat is canceled and the control signal output in RK1 is enabled again.

Function	Default	Configuration
Demand for external heat	0	CO1 → F20 - 1
External demand	0	CO1 → F18 - 1
	0.0 °C	Lower range value: 0.0 to 150 °C
	120.0 °C	Upper range value: 0.0 to 150 °C
	0.0 °C	Boost: 0.0 to 30 °C
AA (terminals 11/12) PWM	0	
AA1, AA2, AA3, AA4 PWM	0	CO5 → F34, F35, F36, F37 - 0 Function: External demand

16.5 Communication

The TROVIS 5578-E Heating and District Heating Controller has an Ethernet interface for Modbus-TCP/IP communication and connection to SAM DISTRICT ENERGY using an Internet router. At the same time, it is also possible to use the galvanically isolated RS-485 interface for Modbus RTU communication.

16.5.1 Ethernet interface

The RJ-45 Ethernet port is located on the left side of the controller housing. The Ethernet interface is deactivated by default. It becomes automatically active when either Modbus-TCP/IP communication or communication with the SAM DISTRICT ENERGY web portal is activated. Dynamic assignment of the IP address (DHCP) is set by default. Additionally, AES encryption is activated for Modbus-TCP/IP communication. Connection to the SAM DISTRICT ENERGY portal is automatically established after the IP address is read when an Internet connection is available. The MAC address of the heating controller is used to register it (specified on the controller housing, starting with 00:E0:99:Fx:xx:xx). For reasons of data security, the heating controller must be registered in the web portal within six hours after the controller has been started. Restarting the heating controller resets this time and allows the controller to be registered after a timeout. The cloud icon at the bottom right of the display (start screen) indicates that connection to SAM DISTRICT ENERGY is established. An exclamation mark appears in the cloud icon if the connection is interrupted. An icon depicting a small bus system appears at the bottom middle of the display (start screen) as soon as any Modbus connection is detected. The number underneath the icon indicates how many Modbus connections exist.

16.5.2 RS-485 interface for Modbus RTU communication.

The galvanically isolated RS-485 interface is configured for Modbus RTU communication by default with the CO6 → F01 - 1 setting.

It is possible to additionally activate device bus operation (CO7 → F01 - 1) in TROVIS 5578-1113, however, only when the device bus units and the Modbus master support its intermittent operation. The use of a standard Modbus master connected to the RS-485 interface does not allow simultaneous operation over Modbus RTU and device bus in this controller version. Therefore, we recommend deactivating the Modbus RTU function (CO6 → F01 - 0) in older controller models to ensure uninterrupted device bus communication.

Sending and receiving activities of the RS-485 interfaces are indicated by an illuminated red/green tip on the rotary switch while the display is not illuminated (controller not being operated).

i *Note*

CO6 → F01 - 0 only deactivates the Modbus RTU function and not the Modbus-TCP/IP function.

Function	Default	Configuration
Modbus RTU	1	CO6 → F01 - 1
16-bit address	0	CO6 → F02
Monitoring	0	CO6 → F07
Manual IP address	0	CO6 → F25 - 1
	192.168.55.2	IP address: 0 to 255 (in blocks)
	255.255.255.0	Subnet: 0 to 255 (in blocks)
	192.168.55.1	Gateway: 0 to 255 (in blocks)
(only when CO6 → F26 - 1)	8.8.8.8	DNS-Server: 0 to 255 (in blocks)
SAM DISTRICT ENERGY	0	CO6 → F26 - 1
Modbus TCP/IP	0	CO6 → F27 - 1
	502	Port configurable as required
Encryption	Kundendienst	CO6 → F28 - 1
(only when CO6 → F27 - 1)		AES key: freely combinable from the list of letters, number and special characters; max. 49 characters

Parameters	Default	Parameter level: value range
Modbus station address (8 bit)	255	PA6 → P01: 1 to 246 When CO6 → F02 - 1: 1 to 32000
Baud rate	19200	PA6 → P02: 9600, 19200

Communication parameter settings

– Modbus station address (8 bit)
  This address is used to identify the heating controller in bus mode. In a system, each controller needs to be assigned a unique address.

16.5.3 RS-485 interface for forwarding Modbus-TCP/IP communication

The CO6 → F31 - 1 setting allows Modbus TCP/IP requests to be forwarded to other Series 5500 Controllers using Modbus RTU communication over RS-485 interface. The multiplex mode with synchronization is activated with the CO7 → F01 - 1 setting in TROVIS 5578-1113. Modbus and device bus can be transmitted over the same RS-485 bus in this mode. The adjustable refreshing rate allows the cycle time of the device bus to be changed.

⇨ Select the AUTO setting if the TCP/IP forwarding is activated to several controllers in a network over a common RS-485 bus (only when CO7 → F01 - 1; essential due to the necessary synchronization even when no device bus communication is required).

Function	Default	Configuration
Forwarding	0	CO6 → F31 - 1
	5 s	Refreshing rate: AUTO to 30 s

16.5.4 Meter bus

The TROVIS 5578-E Heating and District Heating Controller is fitted with an M-Bus interface for up to three M-Bus units according to EN 13757.

For systems with three control circuits, a flow rate and/or power limitation can be be configured in every control circuit based on the measured data of the heat meters HM 1 to HM 3.

i ***Note***

Details on the use of the different heat or water meters can be found in the technical documentation TV-SK 4000179038.

16.5.4.1 Activating the meter bus

To successfully transfer data from the heat meter, the heat meter must use a standardized protocol in accordance with EN 13757. It is not possible to provide a general list of the exact data that can be accessed.

⇨ Contact SAMSON for more information.

All necessary function block parameters to set up the communication with heat meters are available in CO6 → F10.

The meter bus address, model code and reading mode must be specified for the heat meters HM 1 to HM 3.

A meter bus address must be unique and correspond with the address entered in the heat meter. If the meter bus address is unknown, a single heat meter connected to the controller can be assigned the meter bus address 254. The address 255 deactivates the communication with the respective heat meter. The model to be set for the heat meter can be found in TV-SK 4000179038. In general, the default setting of 1434 can be used for most devices.

The following options are available for reading out meters:

- Automatic read-out approx. every 24 hours
- Continuous read-out
- Read-out when the coils (= Modbus data points) assigned to the HM1 to HM3 meters are overwritten with the value 1 over Modbus

A tariff schedule 'HM' can be selected at the rotary switch for HM1 with '1434' and 'Cont.' settings, which assess the consumption data are assigned to a high tariff or a low tariff.

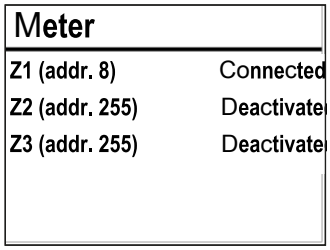

In the extended operating level, the additional 'Meter' screen is displayed, which includes the connection status for meters 1 to 3 when the meter bus is activated. When 'Connected' status is displayed, the following data for each meter can be read by pressing the rotary pushbutton:

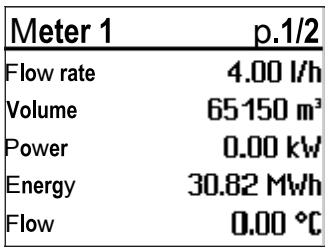

- Flow rate
- Volume
- Power
- Energy
- Flow temperature (Flow)

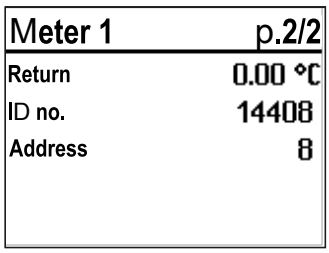

- Return temperature (Return)
- Meter ID
- Meter bus address (address, sent by heat meter)

Function	Default	Configuration
Meter bus	0	CO6 → F10 - 1
	255	HM 1...3 address: 0 to 255
	1434	HM1...3 model: EN1434, Multical3, Apator, SLS/WSF
	Cont.	HM1...3 mode: 24h, Cont., Coil
	Tar-A	Tariff: Tar-A, Tar-E (tariff schedule ON, OFF; only for HM1 with 'EN1434' and 'Cont.' settings) Tar-E: the consumption data are assigned to a high tariff or a low tariff depending on the time schedule programmed in the customer level. Three time periods can be entered per day of the week (not vacations or public holidays): 1-7 daily, 1 = Monday, 2 = Tuesday, ..., 7 = Sunday

16.5.4.2 Flow rate and/or power limitation with meter bus

The refreshing rate of the measured variable (**flow rate** and/or **power**) must be less than fives seconds to ensure that the limitation can be performed properly. Note that some makes, particularly battery-operated heat meters, respond with communication pauses when they are read too frequently. Others might run out of energy early.

- A system with simultaneous room and DHW heating requires maximum energy.
- A system with a fully charged storage tank that is only used for room heating requires less energy.
- A system that suspends room heating during DHW heating requires less energy.

As a result, three different maximum limit values for RK1 can be adjusted in all systems with only one control valve and DHW heating on the secondary side:

- Max. limit to determine the absolute upper limit
- Max. limit (heating) to operate room heating only
- Max. limit (DHW) to operate DHW heating only

If the 'Max. limit' or 'Max. limit (heating)' parameter for HC1 is set to 'OT', a four-point characteristic configured with CO1 → F11 - 1 allows the input of four flow rate or power limits for outdoor-temperature-compensated flow rate or power limitation in addition to the outdoor, flow rate and return temperature values. In all systems with two or three control valves, separate maximum limit values can be adjusted for the flow rate and power.

Flow rate limitation

All necessary function block parameters to set up the flow rate limitation are available in CO6 → F11 or CO6 → F13 and CO6 → F15 for the second and third control circuit. One after the other, the system's max. limit or max. limit (heating) and max. limit (DHW) for systems with only one primary control valve and secondary DHW heating have to be set. The 'Limiting factor' determines how strongly the heating controller responds when the limit values are exceeded in either direction.

When the flow rate limitation is activated, the respective measured values and limits are displayed in the extended operating level after confirming the the system scheme.

i ***Note***

If the heating controller indicates CO5 → F00 - 1, any access to the return, flow rate and power settings is locked.

Function	Default	Configuration
Meter bus	0	CO6 → F10 - 1
	255	HM 1...3 address: 0 to 255
	1434	HM1...3 model: EN1434, Multical3, Apator, SLS/WSF
	Cont.	HM1...3 mode: 24 h, Cont., CoiL
Flow rate limitation in RK1	0	CO6 → F11 - 1
	1.5 m³/h	Max. limit: OT, 0.01 to 650 m³/h
	1.5 m³/h	Max. limit (heating): OT, 0.01 to 650 m³/h
	1.5 m³/h	Max. limit (DHW): 0.01 to 650 m³/h
	1.0	Limiting factor: 0.1 to 10.0
Flow rate limitation in RK2	0	CO6 → F13 - 1
	1.5 m³/h	Max. limit: 0.01 to 650 m³/h
	1.0	Limiting factor: 0.1 to 10.0
Flow rate limitation in RK3	0	CO6 → F15 - 1
	1.5 m³/h	Max. limit: 0.01 to 650 m³/h
	1.0	Limiting factor: 0.1 to 10.0

Power limitation

All necessary function block parameters to set up the power limitation are available in CO6 → F12 or CO6 → F14 and CO6 → F16 for the second and third control circuit.

One after the other, the system's max. limit or max. limit (heating) and max. limit (DHW) for systems with only one primary control valve and secondary DHW heating have to be set. The 'Limiting factor' determines how strongly the heating controller responds when the limit values are exceeded in either direction. When the power limitation is activated, the respective measured values and limits are displayed in the extended operating level after confirming the system scheme (see Chapter 8).

i ***Note***

If the heating controller indicates CO5 → F00 - 1, any access to the return, flow rate and power settings is locked.

Function	Default	Configuration
Meter bus	0	CO6 → F10 - 1
	255	HM 1...3 address: 0 to 255
	1434	HM1...3 model: EN1434, Multical3, Apator, SLS/WSF
	Cont.	HM1...3 mode: 24 h, Cont., CoiL
Power limitation in RK1	0	CO6 → F12 - 1
	1.5 kW	Max. limit: OT, 0.1 to 6500 kW
	1.5 kW	Max. limit (heating): OT, 0.1 to 6500 kW
	1.5 kW	Max. limit (DHW): 0.1 to 6500 kW
	1.0	Limiting factor: 0.1 to 10.0
Power limitation in RK2	0	CO6 → F14 - 1
	1.5 kW	Max. limit: 0.1 to 6500 kW
	1.0	Limiting factor: 0.1 to 10.0
Power limitation in RK3	0	CO6 → F16 - 1
	1.5 kW	Max. limit: 0.1 to 6500 kW
	1.0	Limiting factor: 0.1 to 10.0

16.5.5 Return temperature limitation based on power

A power limit can be determined for control circuit based on the measured power value of the heat meter 1 (HM1). The return temperature in control circuit 1 is limited according the settings entered in PA1 as long

as the measured power value is below the entered power limit. When the measured power value exceeds the power limit, a return temperature limit adjustable separately for control circuit 1 takes effect.

Function	Default	Configuration
RK1 Return temperature limitation based on power	0	CO6 → F17 - 1: New maximum return limit at a power higher than the max. limit (only when CO6 → F10 - 1 and when HM1 is activated)
	1.5 kW	Max. limit: 0.1 to 6500 kW
	55 °C	Max. return temperature: 5.0 to 90.0 °C

16.5.6 Bluetooth® interface

The TROVIS 5578-E Heating and District Heating Controller (serial number 020216 and higher) is fitted with a Bluetooth® interface to allow communication via the TROVIS 55Pro app on smart devices with Android or iOS operating system. The controller firmware 2.54 or higher is required to use the Bluetooth® interface.

Android version 8.0 or higher is required to use the app downloaded from the Google Play Store (see Fig. 21).

iOS version 15 or higher is required to use the app downloaded from the Apple Store (see Fig. 22).

Fig. 21: *QR code · Android*

Fig. 22: *QR code · iOS*

The TROVIS 55Pro app allows users to arrange all the data points of a controller considered to be important in customized tables on various levels. Data points can also be edited on the dashboard. The Trend-Viewer on the app shows color-coded charts of the operating data saved in the controller over the past 14 days in a minute resolution. The optional data log viewer software tool installed on a computer allows a LGV file to be created for further analysis of the logged data. When the controller configuration is read out, a TROVIS-VIEW file is created on the smart device. Writing the controller configuration causes an existing TRO file to be transferred to the controller.

i *Note*

A memory module, mini module, data logging and USB Converter 3 at the RJ-45 Ethernet port (at the bottom left of the controller housing, see Chapter 16.5.1) cannot be used.

Establishing communication between the app and controller

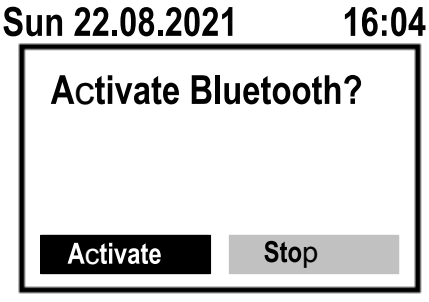

Turn the rotary switch to ⧉ (operating level).
∗ Press and hold for 5 s.
∗ Confirm 'Activate'.



Bluetooth® is activated in the heating controller for the next 15 minutes.
If required:
∗ Confirm '+15 min'
(extends the Bluetooth® time by 15 minutes).
or:
ↀ Confirm 'Exit'.
∗ Confirm 'Exit'.
Bluetooth® is immediately deactivated.

⇨ Start the TROVIS 55Pro app.
⇨ Select 'Add Bluetooth device' in the app (top right menu).
⇨ Select the detected controller.
⇨ If necessary, edit and save the name of the controller.

Communication is established.

NOTICE

Network connections are interrupted.

All network interfaces (SAM DISTRICT ENERGY, Modbus TCP) are locked while the Bluetooth® service interface is active. Any active connections are terminated. After deactivating the Bluetooth® interface, the network interfaces are available again after approx. 20 to 30 seconds.

16.6 Function block lists

CO1: RK1 - Heating circuit 1

F	Function	Default	Systems	Comments Function block parameters: value range (default setting)
01	Room sensor	0	Not systems 1.5-1.8, 3.x, 5.x, 7.x, 9.x, 12.x, 14.x, 15.x, 16.x, 17.x, 18.x, 20.0	CO1 → F01 - 1: Room sensor RF1 Temperature reading and FG1 input for Type 5244, 5257-5 or 5257-51 Room Panel active
02	Outdoor sensor	0	1.5–1.8, 3.5, 7.x, 10.5, 25.5	CO1 → F02 - 1: Outdoor sensor AF1 Outdoor-temperature-compensated control active
		1	1.0-1.3, 2.x, 3.0-3.4, 3.9, 4.x-9.x, 10.0-10.3, 11.x-16.x, 17.x, 18.x, 20.0, 21.x, 25.0	
03	Return sensor	0	1.1-1.4, 10.1-10.3, 21.1	CO1 → F03 - 1: Return sensor RüF1; limitation function active **Function block parameters** K_P (limiting factor): 0.1 to 10.0 (1.0)
		1	1.0-1.5, 1.6-1.8, 2.x-9.x, 10.0, 10.5, 11.x-16.x, 17.x, 18.x, 20.0, 21.0, 21.2, 21.9, 25.x	
04	Cooling control	0	Not systems 1.9, 3.8, 3.9, 5.9, 16.x, 17.x, 18.x	CO1 → F04 - 1: Cooling control (only when CO1 → F11 - 1) The cooling control function causes a reversal of the operating direction and a minimum limitation of the return temperature in RK1.
05	Underfloor heating	0	Not systems 1.5-1.8, 3.x, 5.0-5.2, 7.x, 9.x, 12.x, 14.x, 15.x, 16.x, 17.x, 18.x, 20.02	CO1 → F05 - 1: Underfloor heating/drying of jointless floors **Function block parameters** Boost: 0.0 to 50.0 °C (0.0 °C) Start temperature: 20.0 to 60.0 °C (25 °C) Hold (days): 0 to 10 days (0 days) Temp. rise/day: 0.0 to 20.0 °C (5.0 °C) Maximum temperature: 25.0 to 60.0 °C (45.0 °C) Hold (days): 0 to 30 days (4 days) Temp. reduction/day: 0.0 to 20.0 °C (0.0 °C) Start condition: Stop, Start, Hold, Reduction
06	Storage tank sensor SF2	1	3.8, 3.9, 5.9, 16.x, 17.x, 18.x, 20.0	CO1 → F06 - 1: Activate SF2 to switch off charging of the buffer tank
07	Optimization	0	Not systems 1.5-1.8, 3.x, 5.x, 7.x, 9.x, 12.x, 14.x, 15.x, 16.x, 17.x, 18.x, 20.0	CO1 → F07 - 1: Optimization of heating times (only when CO1 → F01 - 1, CO1 → F02 - 1 and CO1 → F29 - 0)
08	Adaptation	0		CO1 → F08 - 1: Heating characteristic adaptation (only when CO1 → F01 - 1, CO1 → F02 - 1 and CO1 → F11 - 0)
09	Flash adaptation	0		CO1 → F09 - 1: Flash adaptation of flow temperature (only when CO1 → F01 - 1) **Function block parameters** Cycle time: 0 or 1 to 100 min (20 min) K_P (gain): 0.0 to 25.0 (0.0)
11	Four-point characteristic	0	Not systems 1.5-1.8, 7.x	CO1 → F11 - 1: Four-point characteristic (only when CO1 → F08 - 0) CO1 → F11 - 0: Gradient characteristic

F	Function	De-fault	Systems	Comments Function block parameters: value range (default setting)
12	Three-step control mode	1	Not system 1.9	CO1 → F12 - 1: Three-step control **Function block parameters** K_P (gain): 0.1 to 50.0 (2.0) T_n (reset time): 1 to 999 s (120 s) T_V (derivative-action time): 0 to 999 s (0 s) T_Y (valve transit time): 15, 20, 25, ..., 240 s (35 s) CO1 → F12 - 0: On/off control **Function block parameters** Hysteresis: 1.0 to 30.0 °C (5.0 °C) Min. ON time: 0 to 10 min (2 min) Min. OFF time: 0 to 10 min (2 min)
13	Damping	0	Not system 1.9	CO1 → F13 - 1: OPEN signal damping (only when CO1 → F12 - 1) **Function block parameters** Max. system deviation: 3.0 to 10.0 °C (3.0 °C)
14	Release	0	Not system 1.9	CO1 → F14 - 1: Release RK1 at BE15; FG1 has no function. **Function block parameters** Active when BI = ON, OFF (ON)
16	Demand processing, 0 to 10 V To terminals 17/18	0	Not system 1.9	CO1 → F16 - 1: Demand processing, 0 to 10 V **Function block parameters** Analog input: 1, 2, 1+2, 3, 1+3, 2+3, 1+2+3 (3)
17	Binary demand processing To terminals 17/18	0	Not for systems with SF3	CO1 → F17 - 1: Binary demand processing **Function block parameters** Active when OFF, ON (ON)
18	External demand	0	Not system 1.9	CO1 → F18 - 1: External demand using a 0 to 10 V signal is determined in the CO5 → F34 to F37 setting with the 'Function: external demand' (default: AA1). The maximum flow set point (with boost, if applicable) is demanded as a 0 to 10 V signal. **Function block parameters** Lower transmission range: 0.0 to 150.0 °C (0.0 °C) Upper transmission range: 0.0 to 150.0 °C (120.0 °C) Boost flow temperature demand: 0.0 to 30.0 °C (0.0 °C)
20	Demand for external heat	0	Not system 1.9	CO1 → F20 - 1: External demand for heat due to insufficient heat supply
21	Speed control of the charging pump	0	3.8, 3.9, 5.9, 16.x, 17.x, 18.x, 20.0	CO1 → F21 - 1: Temperature-based adaptation of the delivery rate of the charging pump The output is determined in the CO5 → F34 to F37 setting with the 'Function: SLP speed' (default: AA1). **Function block parameters** Start speed reduction, limit: 5.0 to 90.0 °C (40.0 °C) Stop speed reduction, limit: 5.0 to 90.0 °C (50.0 °C) Minimum speed: 0 to 50 % (20 %) Maximum speed: 0 to 100 % (100 %)
22	SLP depending on return temperature	0	3.8, 3.9, 5.9, 16.x, 17.x, 18.x, 20.0	CO1 → F22 - 1: Storage tank charging pump not ON unless return hot

F	Function	Default	Systems	Comments Function block parameters: value range (default setting)
23	Differential temperature control	0	1.0, 16.0	CO1 → F23 - 1: Activation of differential temperature control The output is determined in the CO5 → F34 to F37 setting with the 'Function: Differential temperature control' (default: AA1). **Function block parameters** Set point of differential temperature control: 0.0 to 50.0 °C (20.0 °C) Influence factor K_P: 0.1 to 10.0 (1.0) Minimum speed: 0 to 100 % (20 %)
24	Demand only	0	Not system 1.9	CO1 → F24 - 1: RK1 works as a feeder circuit. RK1 only processes external demand for heating; UP1 runs depending on demand
25	Buffer tank bottom sensor	0	3.8, 3.9, 5.9, 16.x, 17.x, 18.x, 20.0	CO1 → F25 - 1: Buffer tank bottom sensor SF3 active **Function block parameters** Temperature limit: 0.0 to 50.0 °C (10 °C)
26	SLP temperature sensor	0	3.8, 3.9, 5.9, 16.x, 17.x, 18.x, 20.0	CO1 → F26 - 1: Different sensor for the speed control of the charging pump **Function block parameters** Sensor: AF1 to SF3 (RüF2)
27	Discharging protection	0	3.8, 3.9, 5.9, 15.4, 15.5, 16.x, 17.x, 18.x, 20.0	CO1 → F27 - 1: Discharging protection active
28	Variable night set-back	0	Not systems 1.5, 1.6, 1.7, 1.8, 3.x, 5.x, 7.x, 9.1, 9.2, 10.5, 12.x, 14.x, 15.x, 16.x, 17.x, 18.x, 20.0	CO1 → F28 - 1: Variable night set-back (only when CO1 → F11 - 0) **Function block parameters** OTL night 100 %: -50.0 to +20.0 °C (+5.0 °C) OTL day 0 %: -50.0 to +5.0 °C (-15.0 °C)
29	Rapid heat-up	0	All	CO1 → F29 - 1 (only when CO1 → F07 - 0 and CO5 → F41 - 0) **Function block parameters** Duration: 10 to 120 min (45 min) Raise: 1 to 100 % (30 %)

F: Function block number, WE: Default setting, Anl: System code number

CO2: RK2 - Heating circuit 2

F	Function	Default	Systems	Comments Function block parameters: value range (default setting)
01	Room sensor	0	3.1–3.4, 3.8, 3.9, 4.x, 5.x, 6.0, 10.x, 16.1, 16.6, 16.8, 17.x, 18.x, 20.0, 25.0, 25.5	CO2 → F01 - 1: Room sensor RF2, temperature reading and FG2 input for Types 5244, 5257-5 and 5257-51 Room Panels active
02	Outdoor sensor	1		CO2 → F02 - 1: With outdoor sensor; Outdoor-temperature-compensated control active **Function block parameters** Select AF1, AF2
03	Return sensor	0	4.x–5.2, 6.x, 10.1–10.3, 16.x	CO2 → F03 - 1: Return sensor RüF2; limitation function active **Function block parameters** K_P (limiting factor): 0.1 to 10.0 (1.0)
		1	3.0–3.5, 10.0, 10.5, 25.x	
04	Cooling control	0	Not systems 3.8, 3.9, 5.9, 16.x, 17.x, 18.x, 20.0	CO2 → F04 - 1: Cooling control The cooling control function causes a reversal of the operating direction and a minimum limitation of the return temperature in RK2.

F	Function	De-fault	Systems	Comments Function block parameters: value range (default setting)
05	Underfloor heat-ing/drying of jointless floors	0	3.1–3.4, 3.8, 3.9, 4.x, 5.x, 6.0, 10.x, 16.1, 16.6, 16.8, 17.x, 18.x, 20.0, 25.0, 25.5	CO2 → F05 - 1: Underfloor heating/drying of jointless floors **Function block parameters** Boost: 0.0 to 50.0 °C (0.0 °C) Start temperature: 20 to 60 °C (25 °C) Hold (days): 0 to 10 days (0 days) Temp. rise/day: 0.0 to 20.0 °C (5.0 °C) Maximum temperature: 25.0 to 60.0 °C (45.0 °C) Hold (days): 0 to 30 days (4 days) Temp. reduction/day: 0.0 to 20.0 °C (0.0 °C) Start condition: Stop, Start, Hold, Reduction
07	Optimization	0	3.1–3.4, 3.8, 3.9, 4.x, 5.x, 6.0, 10.x, 16.1, 16.6, 16.8, 17.x, 18.x, 20.0, 25.0, 25.5	CO2 → F07 - 1: Optimization of heating times (only when CO2 → F01 - 1, CO2 → F02 - 1 and CO2→ 29 - 0)
08	Adaptation	0		CO2 → F08 - 1: Heating characteristic adaptation (only when CO2 → F01 - 1, CO2 → F02 - 1 and CO2 → F11 - 0)
09	Flash adaptation	0		CO2 → F09 - 1: Flash adaptation of flow temperature (only when CO2 → F01 - 1) **Function block parameters** Cycle time: 0 or 1 to 100 min (20 min) K_P (gain): 0.0 to 25.0 (0.0)
11	Four-point character-istic	0	Not system 3.5, 10.5, 25.5	CO2 → F11 - 1: Four-point characteristic (only when CO2 → F08 - 0) CO2 → F11 - 0: Gradient characteristic
12	Control mode	1	3.1–3.4, 3.8, 3.9, 4.x, 5.x, 6.0, 10.x, 16.1, 16.6, 16.8, 17.x, 18.x, 20.0, 25.0, 25.5	CO2 → F12 - 1: Three-step control **Function block parameters** K_P (gain): 0.1 to 50.0 (2.0) T_n (reset time): 1 to 999 s (120 s) T_V (derivative-action time): 0 to 999 s (0 s) T_Y (valve transit time): 15, 20, 25, ..., 240 s (35 s) CO2 → F12 - 0: On/off control **Function block parameters** Hysteresis: 1.0 to 30.0 °C (5.0 °C) Min. ON time: 0 to 10 min (2 min) Min. OFF time: 0 to 10 min (2 min)
13	Damping	0		CO2 → F13 - 1: OPEN signal damping (only when CO2 → F12 - 1) **Function block parameters** Max. system deviation: 3.0 to 10.0 °C (3.0 °C)
14	Release	0		CO2 → F14 - 1: Release RK2 at BE16; FG2 has no function. **Function block parameters** Active when BI = ON, OFF (ON)
16	Demand processing 0 to 10 V	0	3.1–3.4, 3.8, 3.9, 4.x, 5.x, 6.0, 10.x, 16.1, 16.6, 16.8, 17.x, 18.x, 20.0, 25.0, 25.5	CO2 → F16 - 1: Demand processing in RK2 **Function block parameters** Analog input: 1, 2, 1+2, 3, 1+3, 2+3, 1+2+3 (2)

F	Function	De-fault	Systems	Comments Function block parameters: value range (default setting)
24	Demand only	0	3.1–3.4, 3.8, 3.9, 4.x, 5.x, 6.0, 10.x, 16.1, 16.6, 16.8, 17.x, 18.x, 20.0, 25.0, 25.5	CO2 → F24 - 1: RK2 works as a feeder circuit. RK2 only processes external demand for heating; UP2 runs depending on demand
28	Variable night set-back	0	Not system 3.5, 10.5, 25.5	CO2 → F28 - 1: Variable night set-back (only when CO2 → F11 - 0) **Function block parameters** OTL night 100 %: –50.0 to +20.0 °C (5.0 °C) OTL day 0 %: –50.0 to +5.0 °C (–15.0 °C)
29	Rapid heat-up	0	All	CO2 → F29 - 1 (only when CO2 → F07 - 0 and CO5 → F41 - 0) **Function block parameters** Duration: 10 to 120 min (45 min) Raise: 1 to 100 % (30 %)

F: Function block number, WE: Default setting, Anl: System code number

CO3: RK3 - Heating circuit 3

F	Function	De-fault	Systems	Comments Function block parameters: value range (default setting)
01	Room sensor	0	5.x, 6.x, 9.x, 12.x, 13.x, 15.x, 16.5, 16.7, 16.8, 17.8, 21.x, 25.x	CO3 → F01 - 1: Room sensor RF3, temperature reading and FG3 input for Types 5244, 5257-5 and 5257-51 Room Panels active
02	Outdoor sensor	1		CO3 → F02 - 1: With outdoor sensor, outdoor-temperature-compensated control active **Function block parameters** Select AF1, AF2
03	Return sensor	0	5.0-5-2, 6.x, 9.x, 12.x, 13.x, 15.x, 16.5, 16.7, 16.8, 21.1, 21.9	CO3 → F03 - 1: Return sensor RüF2; limitation function active **Function block parameters** K_P (limiting factor): 0.1 to 10.0 (1.0)
		1	21.2, 25.x	
04	Cooling control	0	Not system 5.9, 15.x, 16.x, 17.x	CO3 → F04 - 1: Cooling control The cooling control function causes a reversal of the operating direction and a minimum limitation of the return temperature in RK3.
05	Underfloor heating	0	5.x, 6.x, 9.x, 12.x, 13.x, 15.x, 16.5, 16.7, 16.8, 17.8, 21.x, 25.x	CO3 → F05 - 1: Underfloor heating/drying of jointless floors **Function block parameters** Boost: 0.0 to 50.0 °C (0.0 °C) Start temperature: 20 to 60 °C (25 °C) Hold (days): 0 to 10 days (0 days) Temp. rise/day: 0.0 to 20.0 °C (5.0 °C) Maximum temperature: 25.0 to 60.0 °C (45.0 °C) Hold (days): 0 to 30 days (4 days) Temp. reduction/day: 0.0 to 20.0 °C (0.0 °C) Start condition: Stop, Start, Hold, Reduction

F	Function	De-fault	Systems	Comments Function block parameters: value range (default setting)
07	Optimization	0	5.x, 6.x, 9.x, 12.x, 13.x, 15.x, 16.5, 16.7, 16.8, 17.8, 21.x, 25.x	CO3 → F07 - 1: Optimization of heating times (only when CO3 → F01 - 1, CO3 → F02 - 1 and CO3 → F29 - 0)
08	Adaptation	0		CO3 → F08 - 1: Heating characteristic adaptation (only when CO3 → F01 - 1, CO3 → F02 - 1 and CO3 → F11 - 0)
09	Flash adaptation	0		CO3 → F09 - 1: Flash adaptation of flow temperature (only when CO3 → F01 - 1) **Function block parameters** Cycle time: 0 or 1 to 100 min (20 min) K_P (gain): 0.0 to 25.0 (0.0)
11	Four-point character-istic	0	Not system 25.5	CO3 → F11 - 1: Four-point characteristic (only when CO3 → F08 - 0) CO3 → F11 - 0: Gradient characteristic
12	Three-step control mode	1	5.x, 6.x, 9.x, 12.x, 13.x, 15.x, 16.5, 16.7, 16.8, 17.8, 21.x, 25.x	CO3 → F12 - 1: Three-step control **Function block parameters** K_P (gain): 0.1 to 50.0 (2.0) T_n (reset time): 1 to 999 s (120 s) T_V (derivative-action time): 0 to 999 s (0 s) T_Y (valve transit time): 15, 20, 25, ..., 240 s (35 s) CO3 → F12 - 0: On/off control **Function block parameters** Hysteresis: 1.0 to 30.0 °C (5.0 °C) Min. ON time: 0 to 10 min (2 min) Min. OFF time: 0 to 10 min (2 min)
13	Damping	0		CO3 → F13 - 1: OPEN signal damping (only when CO3 → F12 - 1) **Function block parameters** Max. system deviation: 3.0 to 10.0 °C (3.0 °C)
14	Release	0	Not for sys-tems with SF3	CO3 → F14 - 1: Release RK3 at BE17; FG3 has no function **Function block parameters** Active when BI = ON, OFF (ON)
16	Demand processing, 0 to 10 V	0	5.x, 6.x, 9.x, 12.x, 13.x, 15.x, 16.5, 16.7, 16.8, 17.8, 21.x, 25.x	CO3 → F16 - 1: Demand processing in RK3 **Function block parameters** Analog input: 1, 2, 1+2, 3, 1+3, 2+3, 1+2+3 (1)
24	Demand only	0	5.x, 6.x, 9.x, 12.x, 13.x, 15.x, 16.5, 16.7, 16.8, 17.8, 21.x, 25.x	CO3 → F24 - 1: RK3 works as a feeder circuit. RK3 only processes external demand for heating; UP3 runs de-pending on demand
28	Variable night set-back		Not system 25.5	CO3 → F28 - 1: Variable night set-back (only when CO3 → F11 - 0) **Function block parameters** OTL night 100 %: –50.0 to +20.0 °C (+5.0 °C) OTL day 0 %: –50.0 to +5.0 °C (–15.0 °C)
29	Rapid heat-up	0		CO3 → F29 - 1 (only when CO3 → F07 - 0 and CO5 → F41 - 0) **Function block parameters** Duration: 10 to 120 min (45 min) Raise: 1 to 100 % (30 %)

F: Function block number, WE: Default setting, Anl: System code number

CO4: DHW circuit

F	Function	De-fault	Systems	Comments Function block parameters: value range (default setting)
01	Storage tank sensor SF1	0	1.9, 11.9, 12.9, 13.9, 21.9	CO4 → F01 - 1: Storage tank sensor SF1 CO4 → F01 - 0: Storage tank thermostat (only when CO4 → F02 - 0)
		1	1.1.-1.8, 2.x, 3.1-3.4, 4.1-4.5, 5.1, 5.2, 7.x-9.x, 10.1-10.3, 11.1, 11.2, 11.4, 11.6, 12.1, 13.1, 13.2, 14.x, 15.x, 21.1, 21.2	
02	Storage tank sensor SF2	0	1.2, 1.6, 1.8-1, 1.8-3, 1.9, 2.2, 2.3, 2.4, 3.2, 4.2, 5.2, 7.2, 8.2, 9.2, 9.6, 10.2, 11.0, 11.2, 11.3, 11.6, 12.0, 12.2, 12.9, 13.0, 13.2, 13.9, 14.2, 14.3, 15.2, 15.3, 21.0, 21.2, 21.9	CO4 → F02 - 1: Storage tank sensor SF2 (only when CO4 → F01 - 1)
		1	1.1, 1.3, 1.4, 1.5, 1.7, 1.8-2, 2.0, 2.1, 3.1, 3.3, 3.4, 4.1, 4.3, 4.5, 5.1, 7.1, 8.1, 9.1, 9.5, 10.1, 10.3, 11.1, 11.4, 11.5, 11.9, 12.1, 13.1, 14.1, 15.0, 15.1, 21.1	
03	Return sensor RüF2	0	1.9, 7.x, 8.x, 11.x, 12.x, 13.x, 21.x	CO4 → F03 - 1: Return sensor RüF2; Limitation function active **Function block parameters** K_P (limiting factor): 0.1 to 10.0 (1.0) CO4 → F03 - 1: Return sensor RüF2 or RüF4 when RüF2 is activated for HC2 Output UP1 to layer the return depending on the temperature active
			3.8, 3.9, 5.9, 17.x, 18.x, 20.0	

F	Function	De-fault	Systems	Comments Function block parameters: value range (default setting)
04	Water flow sensor	0	1.9, 3.7, 3.8, 3.9, 5.9, 11.9, 12.9, 13.9, 17.x, 18.x, 21.9	CO4 → F04 - 1: Water flow sensor active **Function block parameters** Sensor: (default = binary) Binary = Flow switch at terminals 17/18 Analog (= water flow sensor 1400-9246) Sync. valve: 0 to 60 min (default = 0 min) 0 to 10 V (= vortex flow sensor) 2 to 10 V (= vortex flow sensor) 0 to 20 mA (= vortex flow sensor; 50 Ω parallel to the analog input) 4 to 20 mA (= vortex flow sensor; 50 Ω parallel to the analog input) When a vortex flow sensor is used: Analog input 1, 2, 3 (3) Lower range value: 0 to 10 V or 0 to 20 mA (adjustable in steps of 0.1) Lower range value: 0 to 250 l/min (adjustable in steps of 1 l/min) Upper range value: 0.1 to 10 V or 0.1 to 20 mA (adjustable in steps of 0.1) Upper range value: 0 to 250 l/min (adjustable in steps of 1 l/min) Processing start: 0 to 25 l/min (adjustable in steps of 0.1 l/min) Processing end: 0 to 250 l/min (adjustable in steps of 1 l/min)
05	Flow sensor	0	1.1-1.4, 1.6, 1.8, 1.9, 2.2, 2.4, 3.2, 3.4, 4.2, 5.2, 7.2, 8.2, 9.2, 9.6, 10.1-10.3, 11.2, 11.9, 12.2, 12.9, 13.2, 13.9, 21.2, 21.9	CO4 → F05 - 1: Flow sensor VF4 (to measure storage tank charging temperature) active
06	Parallel pump operation	0	2.1-2.4, 4-1-4.5	CO4 → F06 - 1: Parallel pump operation **Function block parameters** Stop: 0 to 10 min (10 min) Temperature limit: 20.0 to 90.0 °C (40.0 °C) CO4 → F06 - 0: UP1 switched off during DHW heating
		1	8.x, 9.5, 9.6	
07	Intermediate heating	0	8.x, 9.5, 9.6	CO4 → F07 - 1: After 20 minutes of DHW heating, heating operation in UP1 circuit reactivated for 10 minutes CO4 → F07 - 0: Unlimited priority of storage tank charging in UP1 circuit
		1	2.x, 4.1-4.5	
08	Priority (reverse)	0	1.1-1.4, 3.1-3.4, 4.1-4.5, 5.1, 5.2, 9.x, 10.1-10.3, 11.x, 12.x, 13.x, 15.0, 15.4, 15.5, 21.x	CO4 → F08 - 1: Priority through reverse control (only when CO4 → F09 - 0 and CO4 → F31 - 0) **Function block parameters** Start: 0 to 10 min (2 min) K_P (influence factor): 0.1 to 10.0 (1.0) Control circuit: HC1, HC2, HC3, HC1+HC2, HC1+HC3
09	Priority (set-back)	0	1.1-1.4, 3.1-3.4, 4.1-4.5, 5.1, 5.2, 9.x, 10.1-10.3, 11.1-11.6, 12.1, 12.2, 13.1-13.6, 15.4, 15.5, 21.1, 21.2	CO4 → F09 - 1: Priority through set-back operation (only when CO4 → F08 - 0 and CO4 → F31 - 0) **Function block parameters** Start: 0 to 10 min (2 min) Control circuit: HC1, HC2, HC3, HC1+HC2, HC1+HC3

F	Function	Default	Systems	Comments Function block parameters: value range (default setting)
10	Circulation pump (DHW) integrated into heat exchanger	0	1.6, 1.8, 3.2, 3.4, 5.2, 7.2, 9.2, 11.2, 11.4, 12.2, 13.2, 21.2	CO4 → F10 - 1: Control of DHW circuit active while circulation pump (ZP) is running
		1	11.6, 13.6	CO4 → F10 - 1: Control of DHW circuit active while circulation pump (ZP) is running
11	Operation of circulation pump (DHW) during storage tank charging	0	Not systems 1.9, 11.0, 11.3, 11.9, 12.0, 12.9, 13.0, 13.9, 21.0, 21.9	CO4 → F11 - 1: Circulation pump ZP runs according to time schedule during storage tank charging CO4 → F11 - 0: Circulation pump (ZP) switched off during storage tank charging
12	Control mode	1	1.9, 3.9, 5.9, 7.x, 8.x, 9.x, 11.x, 12.x, 13.x, 17.x, 18.x, 20.0, 21.x	CO4 → F12 - 1: Three-step control **Function block parameters** Minimum speed: 5 to 50 % (20 %) (systems 3.8, 3.9, 5.9, 17.x, 18.x, 20.0 only) K_P (gain): 0.1 to 50.0 (2.0; systems 1.9, 11.9, 12.9, 13.9, 21.9: 0.6) T_n (reset time): 1 to 999 s (120 s, systems 3.9, 5.9, 17.x 18.x: 30 s; systems 1.9, 11.9, 12.9, 13.9, 21.9: 12 s) T_V (derivative-action time): 0 to 999 s (0 s) T_Y (valve transit time): 15 to 240 s (35 s; systems 1.9, 11.9, 12.9, 13.9, 21.9: 20 s, not systems 3.8, 3.9, 5.9, 17.x, 18.x, 20.0) CO4 → F12 - 0: On/off control (not systems 3.8, 3.9, 5.9, 17.x, 18.x, 20.0); in this case: F12 - 0 = F12 - 1 **Function block parameters** Hysteresis: 1.0 to 30.0 °C (5.0 °C) Min. ON time: 0 to 10 min (2 min) Min. OFF time: 0 to 10 min (2 min)
13	Damping	0	1.1–1.9, 2.x, 3.1–3.4, 3.8, 3.9, 4.1–4.5, 5.1, 5.2, 5.9, 7.x, 8.x, 9.x, 10.1–10.3, 11.x, 12.x, 13.x, 14.x, 15.x, 17.x, 18.x, 20.0, 21.x	CO4 → F13 - 1: OPEN signal damping (only when CO4 → F12 - 1) **Function block parameters** Max. system deviation: 3.0 to 10.0 °C (3.0 °C)
		1		CO4 → F13 - 1: OPEN signal damping (only when CO4 → F04 - 1, select: Analog) **Function block parameters** Max. system deviation: 3.0 to 10.0 °C (8.0 °C) Max. system deviation: 3.0 to 10.0 °C (8.0 °C)
14	Thermal disinfection	0	Not systems 3.9, 5.9, 17.x, 18.x, 20.0	CO4 → F14 - 1: Thermal disinfection (only when CO4 → F01 - 1) **Function block parameters** Day of week: Monday, Tuesday, ..., daily (Wednesday) Time: Adjustable as required in steps of 15 minutes (00:00-04:00) Disinfection temperature: 60.0 to 90.0 °C (70.0 °C) Set point boost: 0.0 to 50.0 °C (10.0 °C); (only systems 1.9, 3.8, 3.9, 5.9, 11.0, 11.3, 11.5, 11.9, 12.0, 12.9, 13.0, 13.9, 17.x, 18.x, 20.0, 21.0, 21.9) Duration: 0 to 255 min (0 min) when Start time = Stop time **Select:** Active when binary input (BE) = OFF, ON (ON)
			3.9, 5.9, 17.x, 18.x, 20.0	CO4 → F14 - 1: Thermal disinfection using return sensor (circulation) RüF3

F	Function	Default	Systems	Comments Function block parameters: value range (default setting)
15	SLP depending on return temperature	0	1.5, 2.7, 2.0, 2.1, 2.3, 3.1, 3.3, 4.1, 4.3, 5.1, 11.1	CO4 → F15 - 1: Storage tank charging pump not ON unless return hot (for systems 1.5, 1.7, 2.0, 2.1, 2.3, 4.1, 4.3, 5.1 only when CO1 → F03 - 1; for system 11.1 only when CO4 → F03 - 1)
16	Priority for external demand	0	1.5-1.8, 2.x, 3.1-3.4, 4.1-4.3, 5.x, 15.0, 15.4, 15.5	CO4 → F16 - 1: Priority for external demand **Note:** a high external demand causes excessive charging temperatures in DHW circuits without control valve. The default setting cannot be changed in systems 7.x to 9.x
		1	7.x-9.x	
19	Switchover	0	Not systems 1.9, 3.9, 5.9, 11.0, 11.3, 11.5, 11.9, 12.0, 12.9, 13.0, 13.9, 17.x, 18.x, 20.0, 21.0, 21.9	CO4 → F19 - 1: Switchover SF1, SF2 according to a time schedule. SF1 applies for day mode. SF1 applies for day mode and SF2 for night mode. (only when CO4 → F02 - 1)
20	Return control	0	7.1, 8.1, 9.1, 9.5, 11.1, 12.1, 13.1, 21.1	CO4 → F20 - 1: DHW circuit additionally controlled by a globe valve
21	Speed control of the charging pump	0	1.5-1.8, 2.x, 3.1-3.4, 4.1-4.3, 5.1, 5.2, 7.x, 8.x, 9.x, 10.1-10.3, 11.1, 11.2, 11.4, 11.6, 12.1, 12.2, 13.1, 13.2, 21.1, 21.2	CO4 → F21 - 1: Temperature-based adaptation of the delivery rate of the charging pump The output is determined in the CO5 → F34 to F37 setting with the 'Function: SLP speed' (default: AA1). **Function block parameters** Start speed reduction, limit: 5.0 to 90.0 °C (40.0 °C) Stop speed reduction, limit: 5.0 to 90.0 °C (50.0 °C) Minimum speed: 0 to 50 % (20 %) Maximum speed: 0 to 100 % (100 %)
22	Cold charging protection	0	1.1	CO4 → F22 - 1: Storage tank charging started when the primary flow temperature is high enough **Function block parameters** Valve position: 1 to 100 %
23	Electric heating cartridge	0	3.8, 3.9, 17.1, 18.1, 20.0	CO4 → F23 - 1: The binary output BA10 to release the electric heating cartridge is activated based on the temperature at SF1 for thermal disinfection (only when CO4 → F14 - 1)
24	Bottom sensor for thermal disinfection	0	1.2, 1.4, 1.6, 1.8, 2.2, 2.4, 3.2, 3.4, 4.2, 5.2, 7.2, 8.2, 9.2, 9.6, 10.2, 11.2, 11.4, 11.6, 12.2, 13.2, 13.6, 14.2, 15.2, 21.2	CO4 → F24 - 1: only when CO4 → F14 - 1 Sensor RüF2 as switch-off sensor active
25	ZP speed	0	All	CO4 → F25 - 1: Speed control, temperature sensor RüF4/AF2 active The output is determined in the CO5 → F34 to F37 setting with the 'Function: ZP speed' (default: AA3). **Function block parameters** Return set point: 5.0 to 90.0 °C (55 °C) K_P (gain): 0.1 to 50.0 (1.0) T_n (reset time): 30 to 2000 s (300 s) Minimum speed: 5 to 50 % (10 %)

F	Function	Default	Systems	Comments Function block parameters: value range (default setting)
26	SLP temperature sensor	0	All	CO4 → F26 - 1: Different sensor for the speed control of the charging pump **Function block parameters** Sensor: AF1 to SF3 (RüF2)
27	Discharging protection		Not systems 1.1-1.4, 1.9, 3.8, 3.9, 5.9, 10.1-10.3, 11.0, 11.3, 11.9, 12.0, 12.9, 13.0, 13.9, 14.x, 15.x, 17.x, 18.x, 20.0, 21.0, 21.9	CO4 → F27 - 1: Discharging protection active
28	Ratio control	0	3.8, 3.9, 5.9, 17.x, 18.x	CO4 → F28 - 1: Ratio control active (only when CO4 → F04 - 1: Analog, 0/2 to 10 V or 0/4 to 20 mA) **Function block parameters** Lower range value: 0 to 250 l/min (5 l/min) Upper range value: 1 to 250 l/min (30 l/min) Minimum speed: 0 to 100 % (20 %)
29	DHW on/off cycle mode	0	3.8, 3.9, 5.9, 17.x, 18.x	CO4 → F29 - 1: On/off cycle mode Y4 active (only when CO4 → F28 - 1) **Function block parameters** ON time: 1 to 250 s (15 s) OFF time: 1 to 250 s (60 s) Upper range value: 1 to 250 l/min (30 l/min) Limit for T control: 1 to 250 l/min (4 l/min)
30	ZP on/off cycle mode	0	All	CO4 → F29 - 1: ZP on/off cycle mode active **Function block parameters** ON time: 2 to 30 min (10 min) OFF time: 2 to 30 min (10 min)
31	Priority (stand-by)	0	1.1-1.4, 3.1-3.4, 4.1-4.5, 5.1, 5.2, 9.x, 10.1-10.3, 11.1-11.6, 12.1, 12.2, 13.1-13.6, 21.1-21.2	CO4 → F31 - 1: Priority through stand-by mode (only when CO4 → F08 - 0 and F09 - 0) **Function block parameters** Start: 0 to 10 min (2 min) Control circuit: HC1, HC2, HC3, HC1+HC2, HC1+HC3
35	Release DHW	0	All	CO4 → F35 - 1: Release DHW at BE16 FG2 has no function. **Function block parameters** Active when BI = ON, OFF (ON)
36	Control parameters RK2		20.0	CO4 → F36 - 0/1: Control parameters RK2 **Function block parameters** K_P (gain): 0.1 to 50.0 (0.6) T_n (reset time): 30 to 2000 s (12 s) T_V (derivative-action time): 0 to 999 s (0 s) T_Y (valve transit time): 15, 20, 25, … , 240 s (20 s)

F: Function block number, WE: Default setting, Anl: System code number

CO5: System-wide functions

If the reading CO5 → F00 - 1 appears on the display, any access to the return, flow rate and power settings is locked.

F	Function	Default	Systems	Comments Function block parameters: value range (default setting)
01	Sensor type	1	All	CO5 → F01 - 1, F02 → 0: Pt 1000 CO5 → F01 - 0, F02 → 0: PTC CO5 → F01 - 1, F02 → 1: Ni 1000
02				
03				
04	Summer mode	0	Not systems 1.5, 1.6, 1.9, 3.5, 10.5, 25.5	CO5 → F04 - 1: Summer mode **Function block parameters** Date: Adjustable as required (01.06. - 30.09.) No. days until activation: 1 to 3 (2) No. days until deactivation: 1 to 3 (1) Limit: 0.0 to 30.0 °C (18.0 °C)
05	Delayed outdoor temperature adaptation (decreasing)	0	Not system 1.9	CO5 → F05 - 1: Delayed outdoor temperature adaptation as the temperature falls **Function block parameters** Delay/h: 0.2 to 6.0 °C (3.0 °C)
06	Delayed outdoor temperature adaptation (increasing)	0	Not system 1.9	CO5 → F06 - 1: Delayed outdoor temperature adaptation as the temperature rises **Function block parameters** Delay/h: 0.2 to 6.0 °C (3.0 °C)
07	Error message	0	Not systems 5.1, 5.2, 5.9, 6.1, 9.x, 12.1, 12.2-x, 13.1, 13.2, 13.6, 15.1, 15.2, 15.3, 17.8, 21.1, 21.2	CO5 → F07 - 1: Terminal for error message: see table in system scheme in Chapter 16.1. **Function block parameters** Relay contact = NO contact, NC contact (NO contact)
08	Summer time	0	All	CO5 → F08 - 1: Summer/standard time switchover
09	Frost protection	0	1.5, 1.6, 1.9, 3.5, 10.5, 25.5	CO5 → F09 - 0: Restricted frost protection **Function block parameters** Frost protection limit: –15.0 to +3.0 °C (+3.0 °C)
		1	Not systems 1.5, 1.6, 1.9, 3.5, 10.5, 25.5	CO5 → F09 - 1: Highest priority for frost protection **Function block parameters** Frost protection limit: –15.0 to +3.0 °C (+3.0 °C)
10	Power limitation at terminals 17/18	0	Not for systems with SF3, not system 1.9	CO5 → F10 - 1: Power limitation in RK1 with pulses (only when CO6 → F12 - 0) **Function block parameters** Max. limit: OT to 800 pulses/h (15 pulses/h) Max. limit (heating): OT to 800 pulse/h (15 pulse/h) Max. limit (DHW): 1 to 800 pulses/h (15 pulses/h) Limiting factor: 0.1 to 10.0 (1.0) **Note:** 'Max. limit (heating)' and 'Max. limit (DHW)' not with systems 1.0, 1.5-1.8, 3.0, 3.5, 3.8, 3.9, 4.0, 5.9, 7.x, 10.x, 11.x, 12.x, 13.x, 14.x, 15.x, 16.x, 17.x, 18.x, 20.0, 21.x, 25.x
12	Creep feed rate limitation	0	Not system 1.9	CO5 → F12 - 1: Creep feed rate limitation **Function block parameters** Switching mode: Binary at terminals 13/19, Analog at input RüF1 (Binary) Active when BI = ON, OFF (ON)

F	Function	Default	Systems	Comments Function block parameters: value range (default setting)
14	Operation UP1	0	3.0, 5.0, 7.x, 9.1, 9.2, 12.x, 15.1, 16.1, 16.5, 16.7, 16.8	CO5 → F14 - 1: Feeder pump UP1 operation to cover own demand **Note:** The feeder pump UP1 also starts to run to cover the demand of RK2/RK3.
15	Release	0	All	CO5 → F15 - 1: Release controller at BE15 FG1 has no function. **Function block parameters** Active when BI = ON, OFF (ON)
16	Return temperature limitation	0	All	CO5 → F16 - 1: Return temperature limitation with P algorithm
19	Monitoring	0	All	CO5 → F19 - 1: Temperature monitoring active
20	Sensor calibration	1	All	CO5 → F20 - 1: Set all sensor calibration values CO5 → F20 - 0: Delete all sensor calibration values
21	Lock manual level	0	All	CO5 → F21 - 1: Lock manual level Controller runs in automatic mode in ✍ switch position.
22	Lock rotary switch	0	All	CO5 → F22 - 1: Lock the rotary switch It is still possible to enter the key number.
23	OT with 0-10 V	0	All	CO5 → F23 - 1: Send or receive outdoor temperature at AE3 as 0 to 10 V signal The output is determined in the CO5 → F34 to F37 setting with the 'Function: outdoor temperature' (default: AA1). **Function block parameters** Direction: Input, Output (Input) Lower range value: -50.0 to +100.0 °C (-20.0 °C) Upper range value: -50.0 to +100.0 °C (+50.0 °C)
24	0-10 V Input	0	All	CO5 → F24 - 1: The measured values of the selected analog inputs are displayed in 'Special values'. **Function block parameters** Analog input: 1, 2, 1+2, 3, 1+3, 2+3, 1+2+3 (3)
25	AA1 reverse	0	All	CO5 → F25 - 0: 0 V/0 % = Valve CLOSED/pump OFF CO5 → F25 - 1: 0 V/0 % = Valve OPEN/pump with max. delivery rate **Function block parameters** Zero: 0 to 50 % (0 %)
26	AA2 reverse	0	All	CO5 → F26 - 0: 0 V/0 % = Valve CLOSED/pump OFF CO5 → F26 - 1: 0 V/0 % = Valve OPEN/pump with max. delivery rate **Function block parameters** Zero: 0 to 50 % (0 %)
27	AA3 reverse	0	All	CO5 → F27 - 0: 0 V/0 % = Valve CLOSED/pump OFF CO5 → F27 - 1: 0 V/0 % = Valve OPEN/pump with max. delivery rate **Function block parameters** Zero: 0 to 50 % (0 %)
28	AA4 reverse	0	All	CO5 → F28 - 0: 0 V/0 % = Valve CLOSED/pump OFF CO5 → F28 - 1: 0 V/0 % = Valve OPEN/pump with max. delivery rate **Function block parameters** Zero: 0 to 50 % (0 %)

F	Function	De-fault	Systems	Comments Function block parameters: value range (default setting)
31	AE1 zero	0	All	CO5 → F31 - 0 **Function block parameters** Lower transmission range: 0 to 150 °C (0 °C) Upper transmission range: 0 to 150 °C (120 °C) CO5 → F31 - 1 **Function block parameters** Zero: 5 to 20 % (5 %) Lower transmission range: 0 to 150 °C (0 °C) Upper transmission range: 0 to 150 °C (120 °C)
32	AE2 zero	0	All	CO5 → F32 - 0 **Function block parameters** Lower transmission range: 0 to 150 °C (0 °C) Upper transmission range: 0 to 150 °C (120 °C) CO5 → F32 - 1 **Function block parameters** Zero: 5 to 20 % (5 %) Lower transmission range: 0 to 150 °C (0 °C) Upper transmission range: 0 to 150 °C (120 °C)
33	AE3 zero	0	All	CO5 → F33 - 0 **Function block parameters** Lower transmission range: 0 to 150 °C (0 °C) Upper transmission range: 0 to 150 °C (120 °C) CO5 → F33 - 1 **Function block parameters** Zero: 5 to 20 % (5 %) Lower transmission range: 0 to 150 °C (0 °C) Upper transmission range: 0 to 150 °C (120 °C)
34	AA1 PWM	0	All	CO5 → F34 - 0: 0 to 10 V (continuous-action signal) CO5 → F34 - 1: PWM signal **Function block parameters** Function: Y1, Y2, Y3, Y4, 10 V supply, 3 V supply, differential temperature control, SLP speed, ZP speed, external demand, outdoor temperature (Y1)
35	AA2 PWM	0	All	CO5 → F35 - 0: 0 to 10 V (continuous-action signal) CO5 → F35 - 1: PWM signal **Function block parameters** Function: Y1, Y2, Y3, Y4, 10 V supply, 3 V supply, differential temperature control, SLP speed, ZP speed, external demand, outdoor temperature (Y2)
36	AA3 PWM	0	All	CO5 → F36 - 0: 0 to 10 V (continuous-action signal) CO5 → F36 - 1: PWM signal **Function block parameters** Function: Y1, Y2, Y3, Y4, 10 V supply, 3 V supply, differential temperature control, SLP speed, ZP speed, external demand, outdoor temperature (Y3)

F	Function	Default	Systems	Comments Function block parameters: value range (default setting)
37	AA4 PWM	0	Not systems 3.8, 3.9, 5.9, 17.x, 18.x, 20.0	CO5 → F37 - 0: 0 to 10 V (continuous-action signal) **Function block parameters** Function: Y1, Y2, Y3, Y4, 10 V supply, 5 V supply, 3 V supply, differential temperature control, SLP speed, ZP speed, external demand, outdoor temperature (10 V supply)
		1	3.8, 3.9, 5.9, 17.x, 18.x, 20.0	CO5 → F37 - 1: PWM signal **Function block parameters** Function: Y1, Y2, Y3, Y4, 10 V supply, 5 V supply, 3 V supply, differential temperature control, SLP speed, ZP speed, external demand, outdoor temperature (10 V supply)
41	Smooth transition	0	All	CO5 → F41 - 1 (only when CO1, 2, 3, 11, 12, 13 → F29 - 0) **Function block parameters** Day-night: 0 to 240 min (30 min) Night-day: 0 to 240 min (30 min)

F: Function block number, WE: Default setting, Anl: System code number

CO6: Modbus

F	Function	Default	Systems	Comments Function block parameters: value range (default setting)
01	Modbus	1	All	CO6 → F01 - 1: Modbus RTU active
02	16-bit address	0	All	CO6 → F02 - 1: Modbus 16-bit addressing (only when CO6 → F01 - 1) CO6 → F02 - 0: Modbus 8-bit addressing
07	Monitoring	0	All	CO6 → F07 - 1: Control system monitoring Resets all level bits to 'Autonomous' when there is no communication. (only when CO6 → F01 - 1)
10	Meter bus	0	All	CO6 → F10 - 1: Meter bus active **Function block parameters** HM 1...3 address: 0 to 255 (255) HM1...3 model: EN1434, Multical3, Apator, SLS/WSF (EN1434) HM1...3 mode: 24 h, Cont., CoiL (Cont.) For HM1 with 'EN1434' and 'Cont.' settings, additionally: Additionally: **Select:** Tariff: Tar-A, Tar-E (Tar-A, tariff schedule OFF)
11	Flow rate limitation in RK1	0	Not system 1.9	CO6 → F11 - 1: Flow rate limitation (only when CO6 → F10 - 1 and when HM1 is activated) **Function block parameters** Max. limit: AT, 0.01 to 650 m^3/h (1.5 m^3/h) Max. limit (heating)[1]: AT, 0.01 to 650 m^3/h (1.5 m^3/h) Max. limit (DHW)[1]: 0.01 to 650 m^3/h (1.5 m^3/h) Limiting factor: 0.1 to 10 (1) 1) Not systems 1.0, 1.5-1.8, 3.0, 3.5, 3.8, 3.9, 4.0, 5.9, 7.x, 10.x, 11.x, 12.x, 13.x, 14.x, 15.x, 16.x, 17.x, 18.x, 20.0, 21.x, 25.x

F	Function	De-fault	Systems	Comments Function block parameters: value range (default setting)
12	Power limitation in RK1	0	Not system 1.9	CO6 → F12 - 1: Power limitation (only when CO6 → F10 - 1 and when HM1 is activated) **Function block parameters** Max. limit: AT, 0.1 to 6500 kW (1.5 kW) Max. limit (heating) [1]: AT, 0.1 to 6500 kW (1.5 kW) Max. limit (DHW) [1]: 0.1 to 6500 kW (1.5 kW) Limiting factor: 0.1 to 10 (1) 1) Not systems 1.0, 1.5-1.8, 3.0, 3.5, 3.8, 3.9, 4.0, 5.9, 7.x, 10.x, 11.x, 12.x, 13.x, 14.x, 15.x, 16.x, 17.x, 18.x, 20.0, 21.x, 25.x
13	Flow rate limitation in RK2	0	3.0-3.4, 3.8, 3.9, 4.x, 5.9, 7.x, 8.x, 10.x, 11.x, 12.x, 13.x, 15.x, 16.1, 16.6, 16.8, 17.x, 18.x, 20.0, 21.x, 25.x	CO6 → F13 - 1: Flow rate limitation (only when CO6 → F10 - 1 and when HM2 is activated) **Function block parameters** Max. limit: 0.01 to 650 m^3/h (1.5 m^3/h) Limiting factor: 0.1 to 10 (1)
14	Power limitation in RK2	0		CO6 → F14 - 1: Power limitation (only when CO6 → F10 - 1 and when HM2 is activated) **Function block parameters** Max. limit: 0.1 to 6500 kW (1.5 kW) Limiting factor: 0.1 to 10 (1)
15	Flow rate limitation in RK3	0	5.9, 12.x, 13.x, 15.x, 16.5, 16.7, 16.8, 17.8, 21.x, 25.x	CO6 → F15 - 1: Flow rate limitation (only when CO6 → F10 - 1 and when HM3 is activated) **Function block parameters** Max. limit: 0.01 to 650 m^3/h (1.5 m^3/h) Limiting factor: 0.1 to 10 (1)
16	Power limitation in RK3	0		CO6 → F16 - 1: Power limitation (only when CO6 → F10 - 1 and when HM3 is activated) **Function block parameters** Max. limit: 0.1 to 6500 kW (1.5 kW) Limiting factor: 0.1 to 10 (1)
17	Rtn limit dep. power	0	All	CO6 → F17 - 1: New maximum return limit at a power higher than the max. limit (only when CO6 → F10 - 1 and when HM1 is activated) **Function block parameters** Max. limit: 0.1 to 6500 kW (1.5 kW) Max. return temperature: 5.0 to 90 °C (55 °C)
20	Modbus without building automation system	0	All	CO6 → F20 - 1: Various Modbus specifications do not have any effect on the collective level/building automation system reading
25	Manual IP address	0	All	CO6 → F25 - 0: DHCP active CO6 → F25 - 1: IP address can be selected manually **Function block parameters** IP address: 0 to 255 (in blocks) (192.168.55.2) Subnet: 0 to 255 (in blocks) (255.255.255.0) Gateway: 0 to 255 (in blocks) (192.168.55.1) DNS-Server: 0 to 255 (in blocks) (8.8.8.8) (only when CO6 → F26 - 1)
26	SAM DISTRICT ENERGY	0	All	CO6 → F26 - 1: Connection to SAM DISTRICT ENERGY web portal
27	Modbus TCP/IP	0	All	CO6 → F27 - 1: Modbus TCP/IP active **Function block parameters** Port configurable as required (502)

F	Function	Default	Systems	Comments Function block parameters: value range (default setting)
28	Encryption	0	All	CO6 → F28 - 1: AES encryption active (only when CO6 → F27 - 1) CO6 → F28 - 1 is automatically with CO6 → F27 - 1. **Function block parameters** A maximum of 49 characters freely combinable from the list of letters, number and special characters (Kundendienst)
31	Forwarding	0	All	CO6 → F31 - 1: Modbus TCP/IP access to controller on RS-485 interface active **Function block parameters** Refreshing rate: AUTO to 30 s (5 s); determines the cycle time of the device bus. AUTO setting only when TCP/IP forwarding is activated several times on a RS-485 bus.

F: Function block number, WE: Default setting, Anl: System code number

CO7: Device bus

F	Function	Default	Systems	Comments Function block parameters: value range (default setting)
01	Device bus	0	All	CO7 → F01 - 1: Device bus active **Function block parameters** Device bus address: Auto [1], 1 to 32 (32) 1) Auto = Automatic search for a free device bus address in the system
02	Clock synchronization	0	All	CO7 → F02 - 1: The heating controller sends its system time to all device bus participants once every 24 hours
03	Room panel RK1	0	1.0-1.4, 2.x, 4.x, 6.x, 9.5, 9.6, 10.x, 11.x, 13.x, 21.x, 25.x	CO7 → F03 - 1: Communication with TROVIS 5570 for RK1 active, CO1 → F01 - 1 automatically configured **Function block parameters** Device bus address: Auto [1], 1 to 32 (32) 1) Auto = Automatic search for a room panel set to detection mode
04	Room panel RK2	0	3.0-3.4, 3.8, 3.9, 4.x, 5.x, 6.x, 10.x, 16.1, 16.6, 16.8, 17.x, 18.x, 20.0, 25.x	CO7 → F04 - 1: Communication with TROVIS 5570 for RK2 active, CO2 → F01 - 1 automatically configured **Function block parameters** Device bus address: Auto [1], 1 to 32 (32) 1) Auto = Automatic search for a room panel set to detection mode
05	Room panel RK3	0	5.x, 6.x, 9.x, 12.x, 13.x, 15.x, 16.5, 16.7, 16.8, 17.8, 21.x, 25.x	CO7 → F05 - 1: Communication with TROVIS 5570 for RK3 active, CO3 → F01 - 1 automatically configured **Function block parameters** Device bus address: Auto [1], 1 to 32 (32) 1) Auto = Automatic search for a room panel set to detection mode
06	Send AF1	0	All	CO7 → F06 - 1: **Function block parameters** Register number: 1 to 4 (1)
07	Receive AF1	0	All	CO7 → F07 - 1: **Function block parameters** Register number: 1 to 4 (1)

F	Function	Default	Systems	Comments Function block parameters: value range (default setting)
08	Send AF2	0	All	CO7 -> F08 - 1: Processing active **Function block parameters** Register number: 1 to 4 (2)
09	Receive AF2	0	Not system 1.9	CO7 → F09 - 1: **Function block parameters** Register number: 1 to 4 (2)
10	Send demand RK1	0	All	CO7 → F10 - 1: Send demand **Function block parameters** Register number: 5 to 64 (5)
11	Send demand RK2	0	All	CO7 → F11 - 1: **Function block parameters** Register number: 5 to 64 (5)
12	Send demand RK3	0	All	CO7 → F12 - 1: **Function block parameters** Register number: 5 to 64 (5)
13	Send demand DHW	0	All	CO7 → F13 - 1: 'Charging temperature boost' (P04) is generated in the PA4 level **Function block parameters** Register number: 5 to 64 (5)
14	Send max. demand	0	All	CO7 → F14 - 1: The heating controller already determines internally the maximum flow set point of its circuit and sends it this value to the primary controllers **Function block parameters** Register number: 5 to 64 (5)
15	Receive external demand in RK1	0	All	CO7 → F15 - #1: External demand processing in RK1 **Function block parameters** Register number: 5 to 64 (5)
16	Receive error	0	All	CO7 → F16 - 1: The heating controller generates the 'External error' message as long as the faults of the other device bus participants exist.
17	Receive external demand in RK2	0	All	CO7 → F17 - #1: External demand processing in RK2 **Function block parameters** Register number: 5 to 64 (5)
18	Receive external demand in RK3	0	All	CO7 → F18 - #1: External demand processing in RK3 **Function block parameters** Register number: 5 to 64 (5)
19	Raise return temperature	0	All	CO7 → F19 - 1: Return temperature limit in RK1 raised when 'DHW heating active' message is received over the device bus **Function block parameters** Register number: 5 to 64 (32)
20	Send 'DHW heating active'	0	All	CO7 → F20 - 1: **Function block parameters** Register number: 5 to 64 (32)
21	Receive release RK1	0	All	CO7 → F21 - 1: **Function block parameters** Register number: 5 to 64 (32)
22	Receive release RK2	0	3.1-3.4, 3.8, 3.9, 4.x, 5.x, 6.x, 10.x, 16.1, 16.6, 16.8, 17.x, 18.x, 20.0, 25.x	CO7 → F22 - 1: **Function block parameters** Register number: 5 to 64 (32)

F	Function	Default	Systems	Comments Function block parameters: value range (default setting)
23	Receive release RK3	0	5.x, 6.x, 9.x, 12.x, 13.x, 15.x, 16.5, 16.7, 16.8, 17.8, 21.x, 25.x	CO7 → F23 - 1: **Function block parameters** Register number: 5 to 64 (32)
31	Ext HC11	0	All	CO7 → F31 - 1: TROVIS I/O for heating circuit 11 active **Function block parameters** Device bus address:: 11 to 19 (11) connected/primary, to HC1 (to HC1)
32	Ext HC12	0	All	CO7 → F32 - 1: TROVIS I/O for heating circuit 12 active **Function block parameters** Device bus address:: 11 to 19 (12) connected/primary, to HC1 (to HC1)
33	Ext HC13	0	All	CO7 → F33 - 1: TROVIS I/O for heating circuit 13 active **Function block parameters** Device bus address:: 11 to 19 (13) connected/primary, to HC1 (to HC1)

F: Function block number, WE: Default setting, Anl: System code number

CO8: Initialization of binary inputs BE1 and BE2 (all systems)

F	Function	Default	Systems	Comments Function block parameters: value range (default setting)
01	Processing of binary input BE1	0	All	CO8 -> F01 - 1: Processing active **Function block parameters** Error message when binary input BE = 0, BE = 1, none (1)
02	Processing of binary input BE2	0	All	CO8 -> F02 - 1: Processing active **Function block parameters** Error message when binary input BE = 0, BE = 1, none (1)
03	Processing of binary input BE3	0	All	CO8 -> F03 - 1: Processing active **Function block parameters** Error message when binary input BE = 0, BE = 1, none (1)
04	Processing of binary input BE4	0	All	CO8 -> F04 - 1: Processing active **Function block parameters** Error message when binary input BE = 0, BE = 1, none (1)
05	Processing of binary input BE5	0	All	CO8 -> F05 - 1: Processing active **Function block parameters** Error message when binary input BE = 0, BE = 1, none (1)
06	Processing of binary input BE6	0	All	CO8 -> F06 - 1: Processing active **Function block parameters** Error message when binary input BE = 0, BE = 1, none (1)
09	Processing of binary input BE9	0	All	CO8 -> F09 - 1: Processing active **Function block parameters** Error message when binary input BE = 0, BE = 1, none (1)
10	Processing of binary input BE10	0	All	CO8 -> F10 - 1: Processing active **Function block parameters** Error message when binary input BE = 0, BE = 1, none (1)
11	Processing of binary input BE11	0	All	CO8 -> F11 - 1: Processing active **Function block parameters** Error message when binary input BE = 0, BE = 1, none (1)

F	Function	Default	Systems	Comments Function block parameters: value range (default setting)
12	Processing of binary input BE12	0	All	CO8 -> F12 - 1: Processing active **Function block parameters** Error message when binary input BE = 0, BE = 1, none (1)
13	Processing of binary input BE13	0	All	CO8 -> F13 - 1: Processing active **Function block parameters** Error message when binary input BE = 0, BE = 1, none (1)
15	Processing of binary input BE15	0	All	CO8 -> F15 - 1: Processing active **Function block parameters** Error message when binary input BE = 0, BE = 1, none (1)
16	Processing of binary input BE16	0	All	CO8 -> F16 - 1: Processing active **Function block parameters** Error message when binary input BE = 0, BE = 1, none (1)
17	Processing of binary input BE17	0	All	CO8 -> F17 - 1: Processing active **Function block parameters** Error message when binary input BE = 0, BE = 1, none (1)

F: Function block number, WE: Default setting, Anl: System code number

CO11: RK11 - Heating circuit 11

F	Function	Default	Systems	Comments Function block parameters: value range (default setting)
01	Room sensor	0	All	CO11 → F01 - 1: Room sensor RF11; temperature reading active
02	Outdoor sensor	0	All	CO11 → F02 - 1: Use of measured value AF1; outdoor-temperature-compensated control active
03	Return sensor	1	All	CO11 → F03 - 1: Return sensor RüF11; limitation function active **Function block parameters** K_P (limiting factor): 0.1 to 10.0 (1.0)
05	Underfloor heating	0	All	CO11 → F05 - 1: Underfloor heating/drying of jointless floors **Function block parameters** Boost: 0.0 to 50.0 °C (0.0 °C) Start temperature: 20 to 60 °C (25 °C) Hold (days): 0 to 10 days (0 days) Temp. rise/day: 0.0 to 20.0 °C (5.0 °C) Maximum temperature: 25.0 to 60.0 °C (45.0 °C) Hold (days): 0 to 30 days (4 days) Temp. reduction/day: 0.0 to 20.0 °C (0.0 °C) Start condition: Stop, Start, Hold, Reduction
07	Optimization	0	All	CO11 → F07 - 1: Optimization of heating times (only when CO11 → F01 - 1, CO11 → F02 - 1 and CO11 → F29 - 0)
08	Adaptation	0	All	CO11 → F08 - 1: Heating characteristic adaptation (only when CO11 → F01 - 1, CO11 → F02 - 1 and CO11 → F11 - 0)
09	Flash adaptation	0	All	CO11 → F09 - 1: Flash adaptation of flow temperature (only when CO11 → F01 - 1) **Function block parameters** Cycle time: 0 or 1 to 100 min (20 min) K_P (gain): 0.0 to 25.0 (0.0)

F	Function	Default	Systems	Comments Function block parameters: value range (default setting)
11	Four-point characteristic	0	All	CO11 → F11 - 1: Four-point characteristic (only when CO11 → F08 - 0) CO11 → F11 - 0: Gradient characteristic
12	Three-step control mode	1	All	CO11 → F12 - 1: Three-step control **Function block parameters** K_P (gain): 0.1 to 50.0 (2.0) T_n (reset time): 1 to 999 s (120 s) T_V (derivative-action time): 0 to 999 s (0 s) T_Y (valve transit time): 15, 20, 25, ..., 240 s (35 s) CO11 → F12 - 0: On/off control **Function block parameters** Hysteresis: 1.0 to 30.0 °C (5.0 °C) Min. ON time: 0 to 10 min (2 min) Min. OFF time: 0 to 10 min (2 min)
13	Damping	0	All	CO11 → F13 - 1: OPEN signal damping (only when CO11 → F12 - 1) **Function block parameters** Max. system deviation: 3.0 to 10.0 °C (3.0 °C)
28	Variable night set-back	0	All	CO11 → F28 - 1: Variable night set-back (only when CO11 → F11 - 0) **Function block parameters** OTL night 100 %: –50.0 to +20.0 °C (+5.0 °C) OTL day 0 %: –50.0 to +5.0 °C (–15.0 °C)
29	Rapid heat-up	0	All	CO11 → F29 - 1 (only when CO11 → F07 - 0 and CO5 → F41 - 0) **Function block parameters** Duration: 10 to 120 min (45 min) Raise: 1 to 100 % (30 %)

F: Function block number, WE: Default setting, Anl: System code number

CO12: RK12 - Heating circuit 12

F	Function	Default	Systems	Comments Function block parameters: value range (default setting)
01	Room sensor	0	All	CO12 → F01 - 1: Room sensor RF12; temperature reading active
02	Outdoor sensor	0	All	CO12 → F02 - 1: Use of measured value AF1; outdoor-temperature-compensated control active
03	Return sensor	1	All	CO12 → F03 - 1: Return flow sensor RüF12; limitation function active **Function block parameters** K_P (limiting factor): 0.1 to 10.0 (1.0)
05	Underfloor heating	0	All	CO12 → F05 - 1: Underfloor heating/drying of jointless floors **Function block parameters** Boost: 0.0 to 50.0 °C (0.0 °C) Start temperature: 20 to 60 °C (25 °C) Hold (days): 0 to 10 days (0 days) Temp. rise/day: 0.0 to 20.0 °C (5.0 °C) Maximum temperature: 25.0 to 60.0 °C (45.0 °C) Hold (days): 0 to 30 days (4 days) Temp. reduction/day: 0.0 to 20.0 °C (0.0 °C) Start condition: Stop, Start, Hold, Reduction

F	Function	Default	Systems	Comments Function block parameters: value range (default setting)
07	Optimization	0	All	CO12 → F07 - 1: Optimization of heating times (only when CO12 → F01 - 1, CO12 → F02 - 1 and CO12 → F29 - 0)
08	Adaptation	0	All	CO12 → F08 - 1: Heating characteristic adaptation (only when CO12 → F01 - 1, CO12 → F02 - 1 and CO12 → F11 - 0)
09	Flash adaptation	0	All	CO12 → F09 - 1: Flash adaptation of flow temperature (only when CO12 → F01 - 1) **Function block parameters** Cycle time: 0 or 1 to 100 min (20 min) K_P (gain): 0.0 to 25.0 (0.0)
11	Four-point characteristic	0	All	CO12 → F11 - 1: Four-point characteristic (only when CO12 → F08 - 0) CO12 → F11 - 0: Gradient characteristic
12	Three-step control mode	1	All	CO12 → F12 - 1: Three-step control **Function block parameters** K_P (gain): 0.1 to 50.0 (2.0) T_n (reset time): 1 to 999 s (120 s) T_V (derivative-action time): 0 to 999 s (0 s) T_Y (valve transit time): 15, 20, 25, ..., 240 s (35 s) CO12 → F12 - 0: On/off control **Function block parameters** Hysteresis: 1.0 to 30.0 °C (5.0 °C) Min. ON time: 0 to 10 min (2 min) Min. OFF time: 0 to 10 min (2 min)
13	Damping	0	All	CO12 → F13 - 1: OPEN signal damping (only when CO12 → F12 - 1) **Function block parameters** Max. system deviation: 3.0 to 10.0 °C (3.0 °C)
28	Variable night set-back	0	All	CO12 → F28 - 1: Variable night set-back (only when CO12 → F11 - 0) **Function block parameters** OTL night 100 %: –50.0 to +20.0 °C (+5.0 °C) OTL day 0 %: –50.0 to +5.0 °C (–15.0 °C)
29	Rapid heat-up	0	All	CO12 → F29 - 1 (only when CO12 → F07 - 0 and CO5 → F41 - 0) **Function block parameters** Duration: 10 to 120 min (45 min) Raise: 1 to 100 % (30 %)

F: Function block number, WE: Default setting, Anl: System code number

CO13: RK13 - Heating circuit 13

F	Function	Default	System	Comments Function block parameters: value range (default setting)
01	Room sensor	0	All	CO13 → F01 - 1: Room sensor RF13; temperature reading active
02	Outdoor sensor	0	All	CO13 → F02 - 1: Use of measured value AF1; outdoor-temperature-compensated control active
03	Return sensor	1	All	CO13 → F03 - 1: Return sensor RüF13; limitation function active **Function block parameters** K_P (limiting factor): 0.1 to 10.0 (1.0)

F	Function	De-fault	System	Comments Function block parameters: value range (default setting)
05	Underfloor heating	0	All	CO13 → F05 - 1: Underfloor heating/drying of jointless floors **Function block parameters** Boost: 0.0 to 50.0 °C (0.0 °C) Start temperature: 20 to 60 °C (25 °C) Hold (days): 0 to 10 days (0 days) Temp. rise/day: 0.0 to 20.0 °C (5.0 °C) Maximum temperature: 25.0 to 60.0 °C (45.0 °C) Hold (days): 0 to 30 days (4 days) Temp. reduction/day: 0.0 to 20.0 °C (0.0 °C) Start condition: Stop, Start, Hold, Reduction
07	Optimization	0	All	CO13 → F07 - 1: Optimization of heating times (only when CO13 → F01 - 1, CO13 → F02 - 1 and CO13 → F29 - 0)
08	Adaptation	0	All	CO13 → F08 - 1: Heating characteristic adaptation (only when CO13 → F01 - 1, CO13 → F02 - 1 and CO13 → F11 - 0)
09	Flash adaptation	0	All	CO13 → F09 - 1: Flash adaptation of flow temperature (only when CO13 → F01 - 1) **Function block parameters** Cycle time: 0 or 1 to 100 min (20 min) K_P (gain): 0.0 to 25.0 (0.0)
11	Four-point character-istic	0	All	CO13 → F11 - 1: Four-point characteristic (only when CO13 → F08 - 0) CO13 → F11 - 0: Gradient characteristic
12	Three-step control mode	1	All	CO13 → F12 - 1: Three-step control **Function block parameters** K_P (gain): 0.1 to 50.0 (2.0) T_n (reset time): 1 to 999 s (120 s) T_V (derivative-action time): 0 to 999 s (0 s) T_Y (valve transit time): 15, 20, 25, ..., 240 s (35 s) CO13 → F12 - 0: On/off control **Function block parameters** Hysteresis: 1.0 to 30.0 °C (5.0 °C) Min. ON time: 0 to 10 min (2 min) Min. OFF time: 0 to 10 min (2 min)
13	Damping	0	All	CO13 → F13 - 1: OPEN signal damping (only when CO13 → F12 - 1) **Function block parameters** Max. system deviation: 3.0 to 10.0 °C (3.0 °C)
28	Variable night set-back	0	All	CO13 → F28 - 1: Variable night set-back (only when CO13 → F11 - 0) **Function block parameters** OTL night 100 %: –50.0 to +20.0 °C (+5.0 °C) OTL day 0 %: –50.0 to +5.0 °C (–15.0 °C)
29	Rapid heat-up	0	All	CO13 → F29 - 1 (only when CO13 → F07 - 0 and CO5 → F41 - 0) **Function block parameters** Duration: 10 to 120 min (45 min) Raise: 1 to 100 % (30 %)

F: Function block number, WE: Default setting, Anl: System code number

16.7 Parameter lists

PA1: Heating circuit HC1

P	Reading	Parameter: Value range (default setting)
01	P01 1.2	Flow gradient 0.2 to 3.2 (1.2) 0.2 to 1.0 (0.5) when CO1 → F05 - 1
02	P02 0.0°C	Level (parallel shift) –30.0 to +30.0 °C (0.0 °C)
03	P03 50.0°C	Flow set point (day) –5.0 to +150.0 °C (+50.0 °C) (only when CO1 → F02 - 0 and CO1 → F09 - 1)
04	P04 30.0°C	Flow set point (night) –5.0 to +150.0 °C (+30.0 °C) (only when CO1 → F02 - 0 and CO1 → F09 - 1)
05	P05 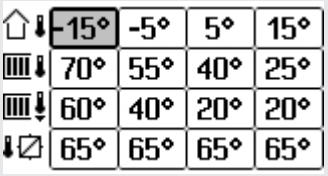	Four-point characteristic Outdoor temperature: –50.0 to +50.0 °C (–15.0 °C, –5.0 °C, +5.0 °C, +15.0 °C) –50.0 to +50.0 °C (+5.0 °C, +15.0 °C, 25.0 °C, +35.0 °C) [1)] Flow temperature: –5.0 to +150.0 °C (+70.0 °C, +55.0 °C, +40.0 °C, +25.0 °C) –5.0 to +150.0 °C (+20.0 °C, +15.0 °C, +10.0 °C, +5.0 °C) [1)] Reduced flow temperature: –5.0 to +150.0 °C (+60.0 °C, +40.0 °C, +20.0 °C, +20.0 °C) –5.0 to +150.0 °C (+30.0 °C, +25.0 °C, +20.0 °C, +15.0 °C) [1)] Return temperature: 5.0 to 90.0 °C (65.0 °C, 65.0 °C, 65.0 °C, 65.0 °C)
		Flow rate 0.01 to 650 m³/h (0.00 m³/h, 0.00 m³/h, 0.00 m³/h, 0.00 m³/h)
	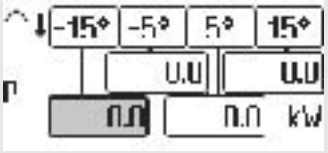	Power 0.1 to 6500 kW (when CO6 → F12 - 1) or 1 to 800 pulse/h (when CO5 → F10 - 1) (0.0 kW, 0.0 kW, 0.0 kW, 0.0 kW) or (0.0 pulse/h, 0.0 pulse/h, 0.0 pulse/h, 0.0 pulse/h)
06	P06 20.0°C	Min. flow temperature –5.0 to +150.0 °C (+20.0 °C)
07	P07 70.0°C	Max. flow temperature 5.0 to 150.0 °C (70.0 °C) 5.0 to 50.0 °C (50.0 °C) when CO1 → F05 - 1
09	P09 -15.0°C	Outdoor temperature for continuous day mode –50.0 to +5.0 °C (–15 °C)
10	P10 40.0°C	Minimum flow temperature set point HC for binary demand processing 5.0 to 150.0 °C (40.0 °C)
11	P11 1.2	Return gradient 0.2 to 3.2 (1.2) (only when CO1 → F03 - 1)

P	Reading	Parameter: Value range (default setting)
12	P12 0.0°C	Return level –30.0 to +30.0 °C (0.0 °C) (only when CO1 → F03 - 1):
13	P13 65.0°C	Base point for return temperature 5.0 to 90.0 °C (65.0 °C) (only when CO1 → F03 - 1):
14	P14 65.0°C	Max. return temperature 5.0 to 90.0 °C (65.0 °C) (only when CO1 → F03 - 1):
15	P15 5.0°C	Set point boost (pre-control circuit): 0.0 to 50.0 °C (5.0 °C)
16	P16 AUTO	Minimum set point to charge buffer tank: AUTO to 90.0 °C (AUTO)
17	P17 AUTO	Stop charging of the buffer tank: AUTO to 90.0 °C (AUTO)
18	P18 6.0°C	Charging temperature boost: 0.0 to 50.0 °C (6.0 °C)
19	P19 1.0	Lag time of charging pump 0.0 to 10.0 (1.0)
20	P20 65.0°C	Max. return temperature during active storage tank charging: 5.0 to 90 °C (65 °C) [2]
21	P21 150.0°C	Demand processing limit: 5.0 to 150 °C (150 °C)

1) With cooling control with or without outdoor sensor

2) Systems 3.8, 3.9 and 5.9 only

PA2: Heating circuit HC2

P	Reading	Parameter: Value range (default setting)
01	P01 1.2	Flow gradient 0.2 to 3.2 (1.2) 0.2 to 1.0 (0.5) when CO2 → F05 - 1
02	P02 0.0°C	Level (parallel shift) –30.0 to +30.0 °C (0.0 °C)
03	P03 50.0°C	Flow set point (day) –5.0 to +150.0 °C (+50.0 °C) (only when CO2 → F02 - 0 and CO2 → F09 - 1)
04	P04 30.0°C	Flow set point (night) –5.0 to +150.0 °C (+30.0 °C) (only when CO2 → F02 - 0 and CO2 → F09 - 1)
05	P05 -15° -5° 5° 15° 70° 55° 40° 25° 60° 40° 20° 20° 65° 65° 65° 65°	Four-point characteristic Outdoor temperature: –50.0 to +50.0 °C (–15.0 °C, –5.0 °C, +5.0 °C, +15.0 °C) –50.0 to +50.0 °C (+5.0 °C, +15.0 °C, +25.0 °C, +35.0 °C) [1] Flow temperature: –5.0 to +150.0 °C (+70.0 °C, +55.0 °C, +40.0 °C, +25.0 °C) –5.0 to +150.0 °C (+20.0 °C, +15.0 °C, +10.0 °C, +5.0 °C) [1] Reduced flow temperature: –5.0 to +150.0 °C (+60.0 °C, +40.0 °C, +20.0 °C, +20.0 °C) –5.0 to +150.0 °C (+30.0 °C, +25.0 °C, +20.0 °C, +15.0 °C) [1] Return temperature: 5.0 to 90.0 °C (65.0 °C, 65.0 °C, 65.0 °C, 65.0 °C)

P	Reading	Parameter: Value range (default setting)
06	P06 20.0°C	Min. flow temperature –5.0 to +150.0 °C (+20.0 °C)
07	P07 70.0°C	Max. flow temperature 5.0 to 150.0 °C (70.0 °C) 5.0 to 50.0 °C (50.0 °C) when CO2 → F05 - 1
09	P09 -15.0°C	Outdoor temperature for continuous day mode –50.0 to +5.0 °C (–15 °C)
11	P11 1.2	Return gradient 0.2 to 3.2 (1.2) (only when CO2 → F03 - 1)
12	P12 0.0°C	Return level –30.0 to +30.0 °C (0.0 °C) (only when CO2 → F03 - 1)
13	P13 65.0°C	Base point for return temperature 5.0 to 90.0 °C (65.0 °C) (only when CO2 → F03 - 1)
14	P14 65.0°C	Max. return temperature 5.0 to 90.0 °C (65.0 °C)
15	P15 5.0°C	Set point boost (pre-control circuit) 0.0 to 50.0 °C (5.0 °C)
21	P21 150.0°C	Demand processing limit 5.0 to 150 °C (150 °C)

1) With cooling control with or without outdoor sensor

PA3: Heating circuit HC3

P	Reading	Parameter: Value range (default setting)
01	P01 1.2	Flow gradient 0.2 to 3.2 (1.2) 0.2 to 1.0 (0.5) when CO3 → F05 - 1
02	P02 0.0°C	Level (parallel shift) –30.0 to +30.0 °C (0.0 °C)
03	P03 50.0°C	Flow set point (day) –5.0 to +150.0 °C (+50.0 °C) (only when CO3 → F02 - 0 and CO3 → F09 - 1)
04	P04 30.0°C	Flow set point (night) –5.0 to +150.0 °C (+30.0 °C) (only when CO3 → F02 - 0 and CO3 → F09 - 1)
05	P05 -15° -5° 5° 15° 70° 55° 40° 25° 60° 40° 20° 20° 65° 65° 65° 65°	Four-point characteristic Outdoor temperature: –50.0 to +50.0 °C (–15.0 °C, –5.0 °C, +5.0 °C, +15.0 °C) –50.0 to +50.0 °C (+5.0 °C, +15.0 °C, +25.0 °C, +35.0 °C) [1] Flow temperature: –5.0 to +150.0 °C (+70.0 °C, +55.0 °C, +40.0 °C, +25.0 °C) –5.0 to +150.0 °C (+20.0 °C, +15.0 °C, +10.0 °C, +5.0 °C) [1] Reduced flow temperature: –5.0 to +150.0 °C (+60.0 °C, +40.0 °C, +20.0 °C, +20.0 °C) –5.0 to +150.0 °C (+30.0 °C, +25.0 °C, +20.0 °C, +15.0 °C) [1] Return temperature: 5.0 to 90.0 °C (65.0 °C, 65.0 °C, 65.0 °C, 65.0 °C)

P	Reading	Parameter: Value range (default setting)
06	P06 20.0°C	Min. flow temperature –5.0 to +150.0 °C (+20.0 °C)
07	P07 70.0°C	Max. flow temperature 5.0 to 150.0 °C (70.0 °C) 5.0 to 50.0 °C (50.0 °C) when CO3 → F05 - 1
09	P09 -15.0°C	Outdoor temperature for continuous day mode –50.0 to +5.0 °C (–15 °C)
11	P11 1.2	Return gradient 0.2 to 3.2 (1.2) (only when CO3 → F03 - 1):
12	P12 0.0°C	Return level –30.0 to +30.0 °C (0.0 °C) (only when CO3 → F03 - 1):
13	P13 65.0°C	Base point for return temperature 5.0 to 90.0 °C (65.0 °C) (only when CO3 → F03 - 1):
14	P14 65.0°C	Max. return temperature 5.0 to 90.0 °C (65.0 °C)
15	P15 5.0°C	Set point boost (pre-control circuit) 0.0 to 50.0 °C (5.0 °C)
21	P21 150.0°C	Demand processing limit 5.0 to 150 °C (150 °C)

1) With cooling control with or without outdoor sensor

PA4: Domestic hot water (DHW)

P	Reading	Parameter: Value range (default setting)
01	P01 40.0°C	Min. adjustable DHW set point 5.0 to 90.0 °C (40.0 °C)
02	P02 60.0°C	Max. adjustable DHW set point 5.0 to 90.0 °C (90.0 °C)
03	P03 5.0°C	Hysteresis 1.0 to 30.0 °C (5.0 °C)
04	P04 10.0°C	Charging temperature boost 0.0 to 50.0 °C (10.0 °C)
05	P05 80.0°C	Max. charging temperature (only when CO4 → F05 - 1) 20.0 to 150.0 °C (80.0 °C)
07	P07 65.0°C	Max. return temperature 5.0 to 90.0 °C (65.0 °C)
10	P10 10.0°C	Solar circuit pump ON 1.0 to 30.0 °C (10.0 °C)
11	P11 3.0°C	Solar circuit pump OFF 0.0 to 30.0 °C (3.0 °C)
12	P12 80.0°C	Max. storage tank temperature 20.0 to 90.0 °C (80.0 °C)

P	Reading	Parameter: Value range (default setting)
13	P13 STOP 80.0°C	Maximum buffer tank temperature 20.0 to 90.0 °C (80.0 °C)
14	P14 100%	Control signal DHW for storage tank charging 5 to 100 % (100 %)
19	P19 STOP 1.0	Lag time for storage tank charging pump (= Valve transit time T_Y x P19) 0.0 to 10.0 (1.0)
21	P21 25.0°C	Return temperature limit, layering at top 5.0 to 90.0 °C (25.0 °C)

PA5: System-wide parameters

P	Reading	Parameter: Value range (default setting)
01	P01 60.0°C	Start temperature for boiler pump 20.0 to 90.0 °C (60.0 °C) (systems 14.1, 14.2, 15.1, 15.2, 16.2, 16.4, 16.5, 16.7 only)
02	P02 5.0°C	Boiler pump hysteresis 0.0 to 30.0 °C (5.0 °C) (systems 14.1, 14.2, 15.1, 15.2, 16.2, 16.4, 16.5, 16.7 only)

PA6: Modbus

P	Reading	Parameter: Value range (default setting)
01	P01 ADR 1	Modbus station address (8 bit) 1 to 246 (255) 1 to 3200 (255) when CO6 → F02 - 1
02	P02 Baud 19200	Modbus Baud rate 9600, 19200 (19200) (only when CO6 → F01 - 1 and CO7 → F01 - 0)

PA11: Heating circuit HC11

P	Reading	Parameter: Value range (default setting)
01	P01 1.2	Flow gradient 0.2 to 3.2 (1.2) 0.2 to 1.0 (0.5) when CO11 → F05 - 1
02	P02 0.0°C	Level (parallel shift) –30.0 to +30.0 °C (0.0 °C)
03	P03 50.0°C	Flow set point (day) –5.0 to +150.0 °C (+50.0 °C) (only when CO11 → F02 - 0 and CO11 → F09 - 1)
04	P04 30.0°C	Flow set point (night) –5.0 to +150.0 °C (+30.0 °C) (only when CO11 → F02 - 0 and CO11 → F09 - 1)
05	P05 -15° -5° 5° 15° 70° 55° 40° 25° 60° 40° 20° 20° 65° 65° 65° 65°	Four-point characteristic Outdoor temperature: –50.0 to +50.0 °C (–15.0 °C, –5.0 °C, +5.0 °C, +15.0 °C) Flow temperature: –5.0 to +150.0 °C (+70.0 °C, +55.0 °C, +40.0 °C, +25.0 °C) Reduced flow temperature: –5.0 to +150.0 °C (+60.0 °C, +40.0 °C, +20.0 °C, +20.0 °C) Return temperature: 5.0 to 90.0 °C (65.0 °C, 65.0 °C, 65.0 °C, 65.0 °C)
06	P06 20.0°C	Min. flow temperature –5.0 to +150.0 °C (+20.0 °C)
07	P07 70.0°C	Max. flow temperature 5.0 to 150.0 °C (70.0 °C) 5.0 to 50.0 °C (50.0 °C) when CO11 → F05 - 1
09	P09 START -15.0°C	Outdoor temperature for continuous day mode –50.0 to +5.0 °C (–15 °C)
11	P11 1.2	Return gradient 0.2 to 3.2 (1.2) (only when CO11 → F03 - 1)
12	P12 0.0°C	Return level –30.0 to +30.0 °C (0.0 °C) (only when CO11 → F03 - 1)
13	P13 65.0°C	Base point for return temperature 5.0 to 90.0 °C (65.0 °C) (only when CO11 → F03 - 1)

P	Reading	Parameter: Value range (default setting)
14	P14 65.0°C	Max. return temperature 5.0 to 90.0 °C (65.0 °C)
15	P15 5.0°C	Set point boost (pre-control circuit) 0.0 to 50.0 °C (5.0 °C)

PA12: Heating circuit HC12

P	Reading	Parameter: Value range (default setting)
01	P01 1.2	Flow gradient 0.2 to 3.2 (1.2) 0.2 to 1.0 (0.5) when CO12 → F05 - 1
02	P02 0.0°C	Level (parallel shift) –30.0 to +30.0 °C (0.0 °C)
03	P03 50.0°C	Flow set point (day) –5.0 to +150.0 °C (+50.0 °C) (only when CO12 → F02 - 0 and CO12 → F09 - 1)
04	P04 30.0°C	Flow set point (night) –5.0 to +150.0 °C (+30.0 °C) (only when CO12 → F02 - 0 and CO12 → F09 - 1):
05	P05 -15° -5° 5° 15° 70° 55° 40° 25° 60° 40° 20° 20° 65° 65° 65° 65°	Four-point characteristic Outdoor temperature: –50.0 to +50.0 °C (–15.0 °C, –5.0 °C, +5.0 °C, +15.0 °C) Flow temperature: –5.0 to +150.0 °C (+70.0 °C, +55.0 °C, +40.0 °C, +25.0 °C) Reduced flow temperature: –5.0 to +150.0 °C (+60.0 °C, +40.0 °C, +20.0 °C, +20.0 °C) Return temperature: 5.0 to 90.0 °C (65.0 °C, 65.0 °C, 65.0 °C, 65.0 °C)
06	P06 20.0°C	Min. flow temperature –5.0 to +150.0 °C (+20.0 °C)
07	P07 70.0°C	Max. flow temperature 5.0 to 150.0 °C (70.0 °C) 5.0 to 50.0 °C (50.0 °C) when CO12 → F05 - 1
09	P09 START -15.0°C	Outdoor temperature for continuous day mode –50.0 to +5.0 °C (–15 °C)
11	P11 1.2	Return gradient 0.2 to 3.2 (1.2) (only when CO12 → F03 - 1)
12	P12 0.0°C	Return level –30.0 to +30.0 °C (0.0 °C) (only when CO12 → F03 - 1)
13	P13 65.0°C	Base point for return temperature 5.0 to 90.0 °C (65.0 °C) (only when CO12 → F03 - 1)
14	P14 65.0°C	Max. return temperature 5.0 to 90.0 °C (65.0 °C)
15	P15 5.0°C	Set point boost (pre-control circuit) 0.0 to 50.0 °C (5.0 °C)

PA13: Heating circuit HC13

P	Reading	Parameter: Value range (default setting)
01	P01 1.2	Flow gradient 0.2 to 3.2 (1.2) 0.2 to 1.0 (0.5) when CO13 → F05 - 1
02	P02 0.0°C	Level (parallel shift) –30.0 to +30.0 °C (0.0 °C)
03	P03 50.0°C	Flow set point (day) –5.0 to +150.0 °C (+50.0 °C) (only when CO13 → F02 - 0 and CO13 → F09 - 1)
04	P04 30.0°C	Flow set point (night) –5.0 to +150.0 °C (+30.0 °C) (only when CO13 → F02 - 0 and CO13 → F09 - 1)
05	P05 -15° -5° 5° 15° 70° 55° 40° 25° 60° 40° 20° 20° 65° 65° 65° 65°	Four-point characteristic Outdoor temperature: –50.0 to +50.0 °C (–15.0 °C, –5.0 °C, +5.0 °C, +15.0 °C) Flow temperature: –5.0 to +150.0 °C (+70.0 °C, +55.0 °C, +40.0 °C, +25.0 °C) Reduced flow temperature: –5.0 to +150.0 °C (+60.0 °C, +40.0 °C, +20.0 °C, +20.0 °C) Return temperature: 5.0 to 90.0 °C (65.0 °C, 65.0 °C, 65.0 °C, 65.0 °C)
06	P06 20.0°C	Min. flow temperature –5.0 to +150.0 °C (+20.0 °C)
07	P07 70.0°C	Max. flow temperature 5.0 to 150.0 °C (70.0 °C) 5.0 to 50.0 °C (50.0 °C) when CO13 → F05 - 1
09	P09 -15.0°C	Outdoor temperature for continuous day mode –50.0 to +5.0 °C (–15 °C)
11	P11 1.2	Return gradient 0.2 to 3.2 (1.2) (only when CO13 → F03 - 1)
12	P12 0.0°C	Return level –30.0 to +30.0 °C (0.0 °C) (only when CO13 → F03 - 1)
13	P13 65.0°C	Base point for return temperature 5.0 to 90.0 °C (65.0 °C) (only when CO13 → F03 - 1)
14	P14 65.0°C	Max. return temperature 5.0 to 90.0 °C (65.0 °C)
15	P15 5.0°C	Set point boost (pre-control circuit) 0.0 to 50.0 °C (5.0 °C)

16.8 Customer-specific data

⇨ See next page.

Customer-specific data

Station	
Operator	
Contact at SAMSON	
System code number	

Function block settings in configuration levels

	CO1	CO2	CO3	CO4	CO5	CO6	CO7	CO8	CO11	CO12	CO13
F01											
F02											
F03											
F04											
F05											
F06											
F07											
F08											
F09											
F10											
F11											
F12											
F13											
F14											
F15											
F16											
F17											
F18											
F19											
F20											
F21											
F22											
F23											
F24											
F25											
F26											
F27											
F28											
F29											
F30											
F31											
F32											
F33											
F34											

	CO1	CO2	CO3	CO4	CO5	CO6	CO7	CO8	CO11	CO12	CO13
F35											
F36											
F37											
F41											

Settings at the rotary switch · Set points

Parameters	Switch position ☼	Value range
HC1 room temperature		0.0 to 40.0 °C
HC2 room temperature		
HC3 room temperature		
HC11 room temperature		
HC12 room temperature		
HC13 room temperature		
DHW temperature		Min. to max. DHW temperature
HC1 OT deactivation value		0 to 50.0 °C
HC2 OT deactivation value		
HC3 OT deactivation value		
HC11 OT deactivation value		
HC12 OT deactivation value		
HC13 OT deactivation value		

Parameters	Switch position ☾	Value range
HC1 room temperature		0.0 to 40.0 °C
HC2 room temperature		
HC3 room temperature		
HC11 room temperature		
HC12 room temperature		
HC13 room temperature		
DHW temperature		Min. to max. DHW temperature
HC1 OT deactivation value		-50.0 to +50.0 °C
HC2 OT deactivation value		
HC3 OT deactivation value		
HC11 OT deactivation value		
HC12 OT deactivation value		
HC13 OT deactivation value		

Settings at the rotary switch · Times-of-use · Switch position

Times-of-use HC1	Mon	Tue	Wed	Thu	Fri	Sat	Sun	Value range
Start first time-of-use								00:00 to 24:00 h
Stop first time-of-use								
Start second time-of-use								
Stop second time-of-use								
Start third time-of-use								
Stop third time-of-use								

Times-of-use HC2	Mon	Tue	Wed	Thu	Fri	Sat	Sun	Value range
Start first time-of-use								00:00 to 24:00 h
Stop first time-of-use								
Start second time-of-use								
Stop second time-of-use								
Start third time-of-use								
Stop third time-of-use								

Times-of-use HC3	Mon	Tue	Wed	Thu	Fri	Sat	Sun	Value range
Start first time-of-use								00:00 to 24:00 h
Stop first time-of-use								
Start second time-of-use								
Stop second time-of-use								
Start third time-of-use								
Stop third time-of-use								

Times-of-use HC11	Mon	Tue	Wed	Thu	Fri	Sat	Sun	Value range
Start first time-of-use								00:00 to 24:00 h
Stop first time-of-use								
Start second time-of-use								
Stop second time-of-use								
Start third time-of-use								
Stop third time-of-use								

Times-of-use HC12	Mon	Tue	Wed	Thu	Fri	Sat	Sun	Value range
Start first time-of-use								00:00 to 24:00 h
Stop first time-of-use								
Start second time-of-use								
Stop second time-of-use								
Start third time-of-use								
Stop third time-of-use								

Times-of-use HC13	Mon	Tue	Wed	Thu	Fri	Sat	Sun	Value range
Start first time-of-use								00:00 to 24:00 h
Stop first time-of-use								
Start second time-of-use								
Stop second time-of-use								
Start third time-of-use								
Stop third time-of-use								

Times-of-use DHW	Mon	Tue	Wed	Thu	Fri	Sat	Sun	Value range
Start first time-of-use								00:00 to 24:00 h
Stop first time-of-use								
Start second time-of-use								
Stop second time-of-use								
Start third time-of-use								
Stop third time-of-use								

Times-of-use ZP	Mon	Tue	Wed	Thu	Fri	Sat	Sun	Value range
Start first time-of-use								00:00 to 24:00 h
Stop first time-of-use								
Start second time-of-use								
Stop second time-of-use								
Start third time-of-use								
Stop third time-of-use								

PA1 parameters (heating circuit HC1), PA2 parameters (heating circuit HC2) and PA3 parameters (heating circuit HC3)

P	Parameters	PA1 (HC1)	PA2 (HC2)	PA3 (HC3)	Value range
01	Flow gradient				0.2 to 3.2
02	Level (parallel shift)				-30.0 to +30.0 °C
03	Flow set point (day)				-5.0 to +150.0 °C
04	Flow set point (night)				-5.0 to +150.0 °C
05	Four-point characteristic				
	Outdoor temperature, point 1				-50.0 to +50.0 °C
	Outdoor temperature, point 2				-50.0 to +50.0 °C
	Outdoor temperature, point 3				-50.0 to +50.0 °C
	Outdoor temperature, point 4				-50.0 to +50.0 °C
	Flow temperature, point 1				-5.0 to +150.0 °C
	Flow temperature, point 2				-5.0 to +150.0 °C
	Flow temperature, point 3				-5.0 to +150.0 °C
	Flow temperature, point 4				-5.0 to +150.0 °C
	Reduced flow temperature, point 1				-5.0 to +150.0 °C
	Reduced flow temperature, point 2				-5.0 to +150.0 °C
	Reduced flow temperature, point 3				-5.0 to +150.0 °C
	Reduced flow temperature, point 4				-5.0 to +150.0 °C
	Return temperature, point 1				5.0 to 90.0 °C
	Return temperature, point 2				5.0 to 90.0 °C
	Return temperature, point 3				5.0 to 90.0 °C
	Return temperature, point 4				5.0 to 90.0 °C
	Flow rate, point 1		–	–	0.01 to 650 m³/h
	Flow rate, point 2		–	–	0.01 to 650 m³/h
	Flow rate, point 3		–	–	0.01 to 650 m³/h
	Flow rate, point 4		–	–	0.01 to 650 m³/h

P	Parameters	PA1 (HC1)	PA2 (HC2)	PA3 (HC3)	Value range
05	Power, point 1		–	–	0.1 to 6500 kW or 1 to 800 pulses/h
	Power, point 2		–	–	
	Power, point 3		–	–	
	Power, point 4		–	–	
06	Min. flow temperature				-5.0 to +150.0 °C
07	Max. flow temperature				-5.0 to +150.0 °C
09	Outdoor temp. for continuous day mode				-50.0 to +5.0 °C
10	Minimum flow temperature set point HC for binary demand processing				5.0 to 150.0 °C
11	Return gradient				0.2 to 3.2
12	Return level				-30.0 to +30.0 °C
13	Base point for return temperature				5.0 to 90.0 °C
14	Max. return temperature				5.0 to 90.0 °C
15	Set point boost (pre-control circuit)				0.0 to 50.0 °C
16	Minimum set point to charge buffer tank		–	–	AUTO to 90.0 °C
17	Stop charging of the buffer tank		–	–	AUTO to 90.0 °C
18	Charging temperature boost		–	–	0.0 to 50.0 °C
19	Lag time of charging pump		–	–	0.0 to 10.0
21	Demand processing limit				5.0 to 150.0 °C

PA11 parameters (heating circuit HC11), PA12 parameters (heating circuit HC12) and PA13 parameters (heating circuit HC13)

P	Parameters	PA11 (HC11)	PA12 (HC12)	PA13 (HC13)	Value range
01	Flow gradient				0.2 to 3.2
02	Level (parallel shift)				-30.0 to +30.0 °C
03	Flow set point (day)				-5.0 to +150.0 °C
04	Flow set point (night)				-5.0 to +150.0 °C
05	Four-point characteristic				
	Outdoor temperature, point 1				-50.0 to +50.0 °C
	Outdoor temperature, point 2				-50.0 to +50.0 °C
	Outdoor temperature, point 3				-50.0 to +50.0 °C
	Outdoor temperature, point 4				-50.0 to +50.0 °C
	Flow temperature, point 1				-5.0 to +150.0 °C
	Flow temperature, point 2				-5.0 to +150.0 °C
	Flow temperature, point 3				-5.0 to +150.0 °C
	Flow temperature, point 4				-5.0 to +150.0 °C
	Reduced flow temperature, point 1				-5.0 to +150.0 °C
	Reduced flow temperature, point 2				-5.0 to +150.0 °C
	Reduced flow temperature, point 3				-5.0 to +150.0 °C
	Reduced flow temperature, point 4				-5.0 to +150.0 °C

P	Parameters	PA11 (HC11)	PA12 (HC12)	PA13 (HC13)	Value range
05	Return temperature, point 1				5.0 to 90.0 °C
	Return temperature, point 2				5.0 to 90.0 °C
	Return temperature, point 3				5.0 to 90.0 °C
	Return temperature, point 4				5.0 to 90.0 °C
06	Min. flow temperature				-5.0 to +150.0 °C
07	Max. flow temperature				-5.0 to +150.0 °C
09	Outdoor temp. for continuous day mode				-50.0 to +5.0 °C
11	Return gradient				0.2 to 3.2
12	Return level				-30.0 to +30.0 °C
13	Base point for return temperature				5.0 to 90.0 °C
14	Max. return temperature				5.0 to 90.0 °C
15	Set point boost (pre-control circuit)				0 to 50.0 °C

CO1 function block parameters (heating circuit HC1), CO2 function block parameters (heating circuit HC2) and CO3 function block parameters (heating circuit HC3)

F	Function block parameters	CO1 (HC1)	CO2 (HC2)	CO3 (HC3)	Value range
03	K_P (limiting factor)				0.1 to 10.0
05	Boost				0.0 to 50.0 °C
	Start temperature				20.0 to 60.0 °C
	Hold (days)				0 to 10 days
	Temp. rise/day				0.0 to 10.0 °C
	Maximum temperature				25.0 to 60.0 °C
	Hold (days)				0 to 30 days
	Temp. reduction/day				0.0 to 10.0 °C
	Start condition				Stop, Start, Hold, Reduction
09	Cycle time				0 to 100 min
	K_P (gain)				0.0 to 25.0
12	K_P (gain)				0.1 to 50.0
	T_n (reset time)				1 to 999 s
	T_V (derivative-action time)				0 to 999 s
	T_Y (valve transit time)				15 to 240 s
	Hysteresis				1.0 to 30.0 °C
	Min. ON time				0 to 10 min
	Min. OFF time				0 to 10 min
13	Max. system deviation				3.0 to 10.0 °C
14	Active when BI =				ON, OFF
16	Analog input				1, 2, 1+2, 3, 1+3, 2+3, 1+2+3
17	Active when BI =		-	-	ON, OFF
18	Lower range value		-	-	0.0 to 150.0 °C
	Upper range value		-	-	0.0 to 150.0 °C
	Boost		-	-	0.0 to 30.0 °C

F	Function block parameters	CO1 (HC1)	CO2 (HC2)	CO3 (HC3)	Value range
21	Start speed reduction		-	-	5.0 to 90.0 °C
	Stop speed reduction		-	-	5.0 to 90.0 °C
	Minimum speed		-	-	0 to 50 %
	Maximum speed		-	-	0 to 100 %
23	Set point of diff. temp. control		-	-	0.0 to 50.0 °C
	Influence factor K_P		-	-	0.1 to 10.0
	Minimum speed		-	-	0 to 100 %
28	OTL night 100 %				-50.0 to +20.0 °C
	OTL day 0 %				-50.0 to +5.0 °C
29	Duration				10 to 120 min
	Raise				1 to 100 %

CO11 function block parameters (heating circuit HC11), CO12 function block parameters (heating circuit HC12) and CO13 function block parameters (heating circuit HC13)

F	Function block parameters	CO11 (HC11)	CO12 (HC12)	CO13 (HC13)	Value range
03	K_P (limiting factor)				0.1 to 10.0
05	Boost				0.0 to 50.0 °C
	Start temperature				20.0 to 60.0 °C
	Hold (days)				0 to 10 days
	Temp. rise/day				0.0 to 10.0 °C
	Maximum temperature				25.0 to 60.0 °C
	Hold (days)				0 to 30 days
	Temp. reduction/day				0.0 to 10.0 °C
	Start condition				Stop, Start, Hold, Reduction
09	Cycle time				0 to 100 min
	K_P (gain)				0.0 to 25.0
12	K_P (gain)				0.1 to 50.0
	T_n (reset time)				1 to 999 s
	T_V (derivative-action time)				0 to 999 s
	T_Y (valve transit time)				15 to 240 s
	Hysteresis				1.0 to 30.0 °C
	Min. ON time				0 to 10 min
	Min. OFF time				0 to 10 min
13	Max. system deviation				3.0 to 10.0 °C
28	OTL night 100 %				-50.0 to +20.0 °C
	OTL day 0 %				-50.0 to +5.0 °C
29	Duration				10 to 120 min
	Raise				1 to 100 %

PA4 parameters (domestic hot water heating)

P	Parameters	PA4 (DHW)	Value range
01	Min. adjustable DHW set point		5.0 to 90.0 °C
02	Max. adjustable DHW set point		5.0 to 90.0 °C
03	Hysteresis		1.0 to 30.0 °C
04	Charging temperature boost		0.0 to 50.0 °C
05	Max. charging temperature		20.0 to 150.0 °C
06	Lag time for storage tank charging pump		0.0 to 10.0 x valve transit time
07	Max. return temperature		5.0 to 90.0 °C
10	Solar circuit pump ON		1.0 to 30.0 °C
11	Solar circuit pump OFF		0.0 to 90.0 °C
12	Max. storage tank temperature		20.0 to 90.0 °C
13	Maximum buffer tank temperature		20.0 to 90.0 °C
14	Control signal DHW for storage tank charging		5 to 100 %
19	Lag time for storage tank charging pump		0.0 to 10.0 (1.0)

CO4 function block parameters (domestic hot water heating)

F	Function block parameters	CO4 (DHW)	Value range
03	K_P (limiting factor)		0.1 to 10.0
04	Sensor		Analog, binary
	Sync. valve		0 to 60 min
	Lower range value		0 to 10 V, 0 to 20 mA
			0 to 250 l/min
	Upper range value		0.1 to 10 V, 0.1 to 20 mA
			0 to 250 l/min
	Processing start		0 to 25 l/min
	Processing end		0 to 250 l/min
06	Stop		0 to 10 min
	Temperature limit		20.0 to 90.0 °C
08	Start		0 to 10 min
	K_P (influence factor)		0.1 to 10.0
	Control circuit		HC1, HC2, HC3, HC1+HC2, HC1+HC3
09	Start		0 to 10 min
	Control circuit		HC1, HC2, HC3, HC1+HC2, HC1+HC3
12	Minimum speed		5 to 50 %
	K_P (gain)		0.1 to 50.0
	T_n (reset time)		1 to 999 s
	T_V (derivative-action time)		0 to 999 s
	T_Y (valve transit time)		15 to 240 s
	Hysteresis		1.0 to 30.0 °C
	Min. ON time		0 to 10 min
	Min. OFF time		0 to 10 min
13	Max. system deviation		3.0 to 10.0 °C

F	Function block parameters	CO4 (DHW)	Value range
14	Day of the week		Monday to Sunday, daily
	Time		Adjustable as required
	Disinfection temperature		60.0 to 90.0 °C
	Set point boost		0.0 to 50.0 °C
	Duration		0 to 255 min
	Active when BI =		ON, OFF
21	Start speed reduction		5.0 to 90.0 °C
	Stop speed reduction		5.0 to 90.0 °C
	Minimum speed		0 to 50 %
	Maximum speed		0 to 100 %
22	Valve position when cold charging protection is active		1 to 100 %
25	Return flow set point		5.0 to 90.0 °C
	K_P (gain)		0.1 to 50.0 °C
	T_n (reset time)		30 to 2000 s
	Minimum speed		5 to 50 %
26	Sensor		AF1 to SF3
28	Lower range value		0 to 250 l/min
	Upper range value		1 to 250 l/min
	Minimum speed		0 to 100 %
29	ON time		1 to 250 s
	OFF time		1 to 250 s
	Limit for T control		1 to 250 l/min
30	ON time		2 to 30 min
	OFF time		2 to 30 min
31	Start		0 to 10 min
	Control circuit		HC1, HC2, HC3, HC1+HC2, HC1+HC3
35	Active when BI =		ON, OFF
36	K_P (gain)		0.1 to 50
	T_n (reset time)		30 to 2000 s
	T_V (derivative-action time)		0 to 999 s
	T_Y (valve transit time)		15, 20, 25, ..., 240 s

PA5 parameters (system-wide parameters)

P	Parameters	PA5	Value range
01	Start temperature for boiler pump		20.0 to 90.0 °C
02	Boiler pump hysteresis		0.0 to 30.0 °C

CO5 function block parameters (system-wide functions)

F	Function block parameters	CO5	Value range
04	Date		Adjustable as required
	No. days until activation		1 to 3
	No. days until deactivation		1 to 3
	Limit		0.0 to 30.0 °C
05	Delay/h		0.2 to 6.0 °C
06	Delay/h		0.2 to 6.0 °C
07	Relay contact		NC contact, NO contact
09	Limit		-15.0 to +3.0 °C
10	Max. limit		OT to 800 pulses/h
	Max. limit (heating)		OT to 800 pulses/h
	Max. limit (DHW)		1 to 800 pulses/h
	Limiting factor		0.1 to 10.0
12	Switching mode		Binary, analog
	Active when BI =		ON, OFF
15	Active when BI =		ON, OFF
21	Return temperature limit, layering at top		5.0 to 90.0 °C
23	Direction		Input, Output
	Lower range value		-50.0 to +100.0 °C
	Upper range value		-50.0 to +100.0 °C
24	Analog input		1, 2, 1+2, 3, 1+3, 2+3, 1+2+3
25	Zero point		0 to 50 %
26	Zero point		0 to 50 %
27	Zero point		0 to 50 %
28	Zero point		0 to 50 %
31	Zero point		5 to 20 %
	Lower transmission range		0 to 150 °C
	Upper transmission range		0 to 150 °C
32	Zero point		5 to 20 %
	Lower transmission range		0 to 150 °C
	Upper transmission range		0 to 150 °C
33	Zero point		5 to 20 %
	Lower transmission range		0 to 150 °C
	Upper transmission range		0 to 150 °C
34	Output AA1		Y1, Y2, Y3, Y4, 10 V supply, 3 V supply, Differential temperature control, SLP speed, ZP speed, External demand, Outdoor temperature

F	Function block parameters	CO5	Value range
35	Output AA2		Y1, Y2, Y3, Y4, 10 V supply, 3 V supply, Differential temperature control, SLP speed, ZP speed, External demand, Outdoor temperature
36	Output AA3		Y1, Y2, Y3, Y4, 10 V supply, 3 V supply, Differential temperature control, SLP speed, ZP speed, External demand, Outdoor temperature
37	Output AA4		Y1, Y2, Y3, Y4, 10 V supply, 3 V supply, Differential temperature control, SLP speed, ZP speed, External demand, Outdoor temperature
41	Day-night		0 to 240 min
	Night-day		0 to 240 min

PA6 parameters (Modbus)

P	Parameters	PA6	Value range
01	Modbus station address (8 bit)		1 to 246
02	Modbus Baud rate		9600, 19200

CO6 function block parameters (Modbus)

F	Function block parameters	CO6	Value range
10	Heat meter 1 address		0 to 255
	HM 1 model		EN1434, Multical3, Apator, SLS/WSF
	Heat meter 1 mode		24 h, Cont., CoiL
	Heat meter 2 address		0 to 255
	HM 2 model		EN1434, Multical3, Apator, SLS/WSF
	Heat meter 3 mode		24 h, Cont., CoiL
	Heat meter 3 address		0 to 255
	HM 3 model		EN1434, Multical3, Apator, SLS/WSF
	Heat meter 3 mode		24 h, Cont., CoiL
11	Max. limit		OT to 650 m³/h
	Max. limit (heating)		OT to 650 m³/h
	Max. limit (DHW)		0.01 to 650 m³/h
	Limiting factor		0.1 to 10

F	Function block parameters	CO6	Value range
12	Max. limit		OT to 6500 kW
	Max. limit (heating)		OT to 6500 kW
	Max. limit (DHW)		0.1 to 6500 kW
	Limiting factor		0.1 to 10
13	Max. limit		0.01 to 650 m³/h
	Limiting factor		0.1 to 10
14	Max. limit		0.1 to 6500 kW
	Limiting factor		0.1 to 10
15	Max. limit		0.01 to 650 m³/h
	Limiting factor		0.1 to 10
16	Max. limit		0.1 to 6500 kW
	Limiting factor		0.1 to 10
17	Max. limit		0.1 to 6500 kW
	Max. return temperature		5.0 to 90 °C
25	IP address		0 to 255 (in blocks)
	Subnet		0 to 255 (in blocks)
	Gateway		0 to 255 (in blocks)
	DNS server		0 to 255 (in blocks)
27	Port		Adjustable as required
28	Encryption		Configurable max. 49 characters
31	Refreshing rate		AUTO, up to 30 s

CO7 function block parameters (device bus)

F	Function block parameters	CO7	Value range
1	Device bus address		Auto, 1 to 32
3	Device bus address		Auto, 1 to 32
4	Device bus address		Auto, 1 to 32
5	Device bus address		Auto, 1 to 32
6	Register number		1 to 4
7	Register number		1 to 4
8	Register number		1 to 4
9	Register number		1 to 4
10	Register number		5 to 65
11	Register number		5 to 65
12	Register number		5 to 65
13	Register number		5 to 65

F	Function block parameters	CO7	Value range
15	Register number		5 to 65
17	Register number		5 to 65
18	Register number		5 to 65
19	Register number		5 to 65
20	Register number		5 to 65
21	Register number		5 to 65
22	Register number		5 to 65
23	Register number		5 to 65
31	Device bus address		11 to 19
32	Device bus address		11 to 19
33	Device bus address		11 to 19

CO8 function block parameters (initialization of free inputs)

F	Function block parameters	CO8	Value range
1	Error message when		BI = 0, BI = 1, none (1)
2	Error message when		BI = 0, BI = 1, none (1)
3	Error message when		BI = 0, BI = 1, none (1)
4	Error message when		BI = 0, BI = 1, none (1)
5	Error message when		BI = 0, BI = 1, none (1)
6	Error message when		BI = 0, BI = 1, none (1)
9	Error message when		BI = 0, BI = 1, none (1)
10	Error message when		BI = 0, BI = 1, none (1)
11	Error message when		BI = 0, BI = 1, none (1)
12	Error message when		BI = 0, BI = 1, none (1)
13	Error message when		BI = 0, BI = 1, none (1)
15	Error message when		BI = 0, BI = 1, none (1)
16	Error message when		BI = 0, BI = 1, none (1)
17	Error message when		BI = 0, BI = 1, none (1)

17 Appendix B

17.1 Accessories

Table 6: *Accessories*

Surge arrester SA 5000	Order no. 1400-9868
TROVIS I/O (expansion module)	Order no. 1000062999
▶ SAM MOBILE+ Gateway	Type 5656
TROVIS-VIEW software (free of charge)	▶ www.samsongroup.com > DOWNLOADS > Software & Drivers > TROVIS-VIEW
myTROVIS web app	▶ myTROVIS
SAM DISTRICT ENERGY	▶ www.samsongroup.com > PRODUCTS > Digital solutions > SAM DISTRICT ENERGY ▶ EB 6901
Water flow sensor with extension cable	Order no. 1400-9246
Sensors and room panels	▶ www.samsongroup.com > PRODUCTS > Sensors and Thermostats ▶ T 5200 (Information Sheet: Temperature Sensors and Thermostats)

17.2 After-sales service

Product support

Service hotline for heating controllers belonging to TROVIS 5400 and TROVIS 5500 Automation Systems (fees apply):

Monday to Friday: 7:30 to 16:00 h (CET)

Phone: 09002 4009-24 (EUR 0.99/min. for landline calls within Germany, other rates apply to calls from outside Germany or from a mobile network)

After-sales service

Contact our after-sales service for support concerning service or repair work or when malfunctions or defects arise.

You can reach our after-sales service at the following e-mail address:

▶ aftersalesservice@samsongroup.com

Addresses of SAMSON AG and its subsidiaries

The addresses of SAMSON AG, its subsidiaries, representatives and service facilities worldwide can be found on our website (▶ www.samsongroup.com) or in all product catalogs.

Required specifications

Please submit the following details:

- Model number
- Serial number
- Firmware version

Key number	**1732**

SAMSON AKTIENGESELLSCHAFT
Weismüllerstraße 3 · 60314 Frankfurt am Main, Germany
Phone: +49 69 4009-0 · Fax: +49 69 4009-1507
samson@samsongroup.com · www.samsongroup.com

2026-10-02 | English | 4000545110 | 1.5